User manual:

User manual

Universal measuring transducer UMU 100-A-B

version 2.2.1

promesstec GmbH I Niedersachsenstraße 4 I D- 48465 Schüttorf I Tel.:+49 (0)5923/ 90 229 0 I Fax:+49 (0)5923/ 90 229 29
E-Mail: office@promesstec.com I Internet: www.promesstec.com

Content

promesstec GmbH I Niedersachsenstraße 4 I D- 48465 Schüttorf I Tel.:+49 (0)5923/ 90 229 0 I Fax:+49 (0)5923/ 90 229 29
E-Mail: office@promesstec.com I Internet: www.promesstec.com

promesstec GmbH I Niedersachsenstraße 4 I D- 48465 Schüttorf I Tel.:+49 (0)5923/ 90 229 0 I Fax:+49 (0)5923/ 90 229 29
E-Mail: office@promesstec.com I Internet: www.promesstec.com

1. General

1.1 For information

- These operating manual provides important information on handling the measuring element. A prerequisite for safe working is compliance with all specified safety notes and instructions for action.
- The qualified personnel must have read and understood these operating manual before mounting and starting up the sensor.
- These operating manual is a component part of the product. Therefore, keep them in a place that is accessible to all users at all times, close to the place of use.
- The local regulations and safety rules applicable to the area of application of the sensor must be observed.
- If the serial number on the type label is no longer readable (e.g.due to mechnical damage), tracebility is no longer ensured.
- The sensors described in the user manual are developed and manufactured according to the newest findings. All components are subject strict quality and environmental criteria during production.
- The manufacturer shall not be liable if damage is caused by improper use, non-observance of these operating instructions, use of insufficiently qualified personnel and unauthorized modifications to the sensor.

1.2 Signs and abbreviations

Warning!
Non-observance can lead to injuries to persons and /or destruction of the device. There may be danger to life.

Attention!
Non-observance can lead to incorrect operation of the device or damage to property.

Information!
Non-observance can influence the operation of the device or cause undesired device reactions.

Danger!
If the safety instructions are not observed, there is a risk of serious or fatal injury from electric current

promesstec GmbH I Niedersachsenstraße 4 I D- 48465 Schüttorf I Tel.:+49 (0)5923/ 90 229 0 I Fax:+49 (0)5923/ 90 229 29
E-Mail: office@promesstec.com I Internet: www.promesstec.com

Warnung

Warning!
A dangerous situation may possibly occur, which can lead to burns due to hot surfaces or liquids if they are not avoided.

Warnung

Warning!

This device is designed for connection to hazardous electric voltages. Ignoring this warning can result in severe personal injury or mechanical damage. To avoid the risk of electric shock and fire, the safety instructions of this manual must be observed and the guidelines followed. The specifications must not be exceeded, and the device must only be applied as described in the following. Prior to the commissioning of the device, this manual must be examined carefully. Only qualified personnel (technicans) should install this device. If the equipment is used in manner not specified by the manufacturer, the protection provieded by the equipment may be impaired.

Gefahr

Warning!

No dangerous voltage may be connected to the device before its permanent installation has been completed, and the following measures should only be carried out when the device is in a de-energized state and under ESD-safe conditions:

- Installation, assembly and disassembly of pipelines.
- Troubleshooting the device.

Warnung

Warning!

The front panel of the device must not be opened, as this may damage the contacts for contacting the UMU-FD front display.
The device does not contain any internal DIP switches or programming jumpers. The UMU 100 must be mounted on a DIN rail according to DIN 60715.

The CE-Mark is the visible sign that the device complies with the regulations.

The double isulation symbol is the symbol that the device meets special requirements for insulation.

promesstec GmbH I Niedersachsenstraße 4 I D- 48465 Schüttorf I Tel.:+49 (0)5923/ 90 229 0 I Fax:+49 (0)5923/ 90 229 29
E-Mail: office@promesstec.com I Internet: www.promesstec.com

2. Transport, packaging and storage

2.1 Transport

Inspect the device for a damage that may have occurred during transport. Report obvious damage immediately.

2.2 Packaging

Do not remove the packaging until immediately before assembly. Keep the packaging, because it provides optimal protection during transport (e. g. changeable installation location, return).

2.3 Storage

Avoid the following influences during longer storage:

- Direct sunlight or close to hot objects
- Mechanical vibration, mechanical shock (hard set up)
- Soot, steam, dust and corrosive gases

If possible, store the device in the original packaging or appropriate packaging.

promesstec GmbH I Niedersachsenstraße 4 I D- 48465 Schüttorf I Tel.:+49 (0)5923/ 90 229 0 I Fax:+49 (0)5923/ 90 229 29
E-Mail: office@promesstec.com I Internet: www.promesstec.com

3. Safety rules

! Further important safety instructions can be found in the individual chapters.

Definitions:

Hazardous voltages have been defined as the range: 75...1500 Volt DC and 50...1000 Volt AC.

Technicians are qualified persons educated or trained to mount, operate, and also trouble-shoot technically correct and in accordance with safety regulations.

Operators, are persons who set or operate the pushbuttons or potentiometers of the product during normal operation and who have been familiarized with the contents of this manual.

Receipt and unpacking:
Unpack the device without damaging it and check the device type corresponds to the one ordered. The packaging should always follow with the device until this has been permanently mounted.

3.1 Intended use of the product

Environment:

Avoid direct sunlight, strong dust or heat, mechanical shocks and impacts; do not expose the device to rain or strong humidity. If necessary, heating is excess of the stated limits for ambient temperatures should be avoided by way of ventilation. The device must be installed in pollution degree 2 or better.

promesstec GmbH I Niedersachsenstraße 4 I D- 48465 Schüttorf I Tel.:+49 (0)5923/ 90 229 0 I Fax:+49 (0)5923/ 90 229 29
E-Mail: office@promesstec.com I Internet: www.promesstec.com

3.2 Personnel qualification

Warnung

Risk of injury due to insufficient qualification Improper handling can lead to considerable personal injury and property damage.
The activities described in these operating instructions may only be performed by qualified personnel with the following qualifications. Keep unqualified personnel away from the hazardous areas.

For mounting and commissioning of the sensor, these persons must be familiar with the applicable country-specific directives and standards, and have the appropriate qualification. You must have knowledge of measurement and control technology, be familiar with electrical circuits and be able to carry out the work described and recognize possible hazards independently. Depending on the operating conditions, other knowledge may also be required, e.g. about aggressive media.

3.3 Special hazards

Warnung

Observe the country-specific regulations (e.g. standards) and, in the case of special applications, observe the applicable standards and directives (e.g. for hazardous media such as Acetylene, flammable or toxic substances as well as refrigeration plants and compressors).
If the relevant regulations are not observed, serious personal injury and damage to property may result!

Warnung

Electrostatic discharge (ESD) protection is required. Proper use of grounded work surfaces and personal wrist straps is required when working with open circuits (printed circuit boards) to prevent damage to sensitive electronic components from electrostatic discharge.

Gefahr

There is danger to life from electric current. There is a immediate risk of death if live parts are touched. Installation and mounting of electrical equipment may only be carried out by qualified electricians. When operating with a defective power supply unit (e.g. short-circuit from mains voltage to output voltage), life-threatening voltages can result at the device.

Warnung

Residual media in devices that have been removed can be hazardous to persons, the environmet and equipment. Sufficient precautions must be taken. This device must not be used in safety or emergency stop devices. Incorrect applications of the device can lead to injuries. In case of a fault, aggressive media at extreme temperatures and under high pressure or vacuum may be present at the device.

promesstec GmbH I Niedersachsenstraße 4 I D- 48465 Schüttorf I Tel.:+49 (0)5923/ 90 229 0 I Fax:+49 (0)5923/ 90 229 29
E-Mail: office@promesstec.com I Internet: www.promesstec.com

4. Commissioning and operation

4.1 Before mounting

Check whether a completely assembled measuring transducer has been supplied. Inspect the device for any transport damage that may have occurred. If such damage is present, notify the carrier and supplier immediately. Keep the packaging, as it provides optimum protection during tranport. Make sure that the housing and the connection contacts are not damaged.

4.2 Mounting / Installation / configuration

- Due to the extremely low power consumption, the units can be mounted side by side without an air gap between them even at an ambient temperature of 60°C.
- Configuration, monitoring, 2-point process calibration and more are performed with either the UMU-FD detachable displays.
- All programming can be password protected.

Calibration and adjustment
During calibration and adjustment, the measurement and connection of external voltages must be carried out in accordance with this manual, and the technician must use tools and instruments that are safe for this purpose.

Normal operation
The operating personnel may only set or operate the device if these are permanently installed in control panels or similar in a justifiable manner so that the operation does not involve any danger to life or material. I.e., there must be no danger from contact and the device must be placed so that it can be easily operated.

promesstec GmbH I Niedersachsenstraße 4 I D- 48465 Schüttorf I Tel.:+49 (0)5923/ 90 229 0 I Fax:+49 (0)5923/ 90 229 29
E-Mail: office@promesstec.com I Internet: www.promesstec.com

5. Decomposition of the system UMU 100-A-B

First, disconnect dangerous voltage from the terminals.

The device is released from the DIN rail by loosening the lower catch.

When the front LED is red / display shows AO.ER

The device has been developed with a high level of safety. Therefore, a continuous measurement of the output current takes place at the 4...20 mA output signal. When the current is 0 mA, the device switches to error mode and the LED indicator lights red. This function is not a standard option, but must be actively selected in the menu. The error mode can only be reset by switching the power supply of the device off and on again.

promesstec GmbH I Niedersachsenstraße 4 I D- 48465 Schüttorf I Tel.:+49 (0)5923/ 90 229 0 I Fax:+49 (0)5923/ 90 229 29
E-Mail: office@promesstec.com I Internet: www.promesstec.com

6. Universal-measuring transducer UMU 100-A-B

- input for WTH, TE, Ohm, potentiometer, mA and V
- 2-wire supply > 16 V
- FM approval for installation in Div. 2
- Outputs for current and voltage
- Universal supply with AC or DC

Application

- Electronic, linear temperature measurement with resistance sensor or
- thermocouple sensor.
- Conversion of linear resistance change into a standard analog current / voltage signal, e.g. from solenoid valves, butterfly valves or linear movements with connected potentiometers.
- Power supply and signal isolator for 2-wire measuring transducer.
- Process control with standard analog output.
- Galvanic isolation of analog signals and measurement of signals that are not grounded.
- Suitable for use in systems up to Performance Level (PL) "d" according to ISO -13849

Technical characteristics

- When the UMU 100 is used in combination with the programming front, all operational parameters of the corresponding application can be adjusted. The UMU 100 is equipped with electronic hardware switches and it is not necessary to open the device to set DIP switches.
- A green / red LED in the front of the device indicates normal operation and malfunctions.
- Constant checking of important memory data for security reasons.
- 2,3 kVAC galvanic isolation of the 3 ports.

promesstec GmbH I Niedersachsenstraße 4 I D- 48465 Schüttorf I Tel.:+49 (0)5923/ 90 229 0 I Fax:+49 (0)5923/ 90 229 29
E-Mail: office@promesstec.com I Internet: www.promesstec.com

7. Applications

Input signals:

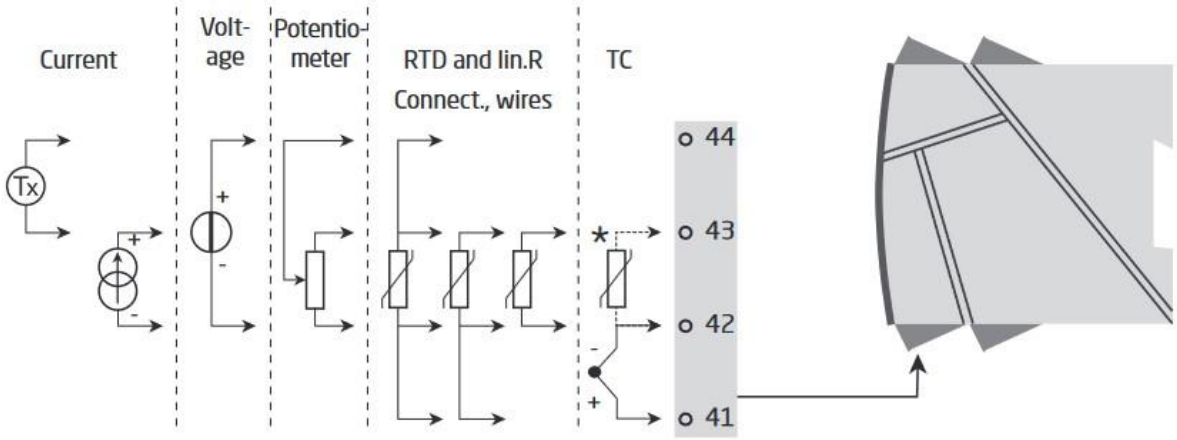

Order separately: CJC connector!

Output signals:

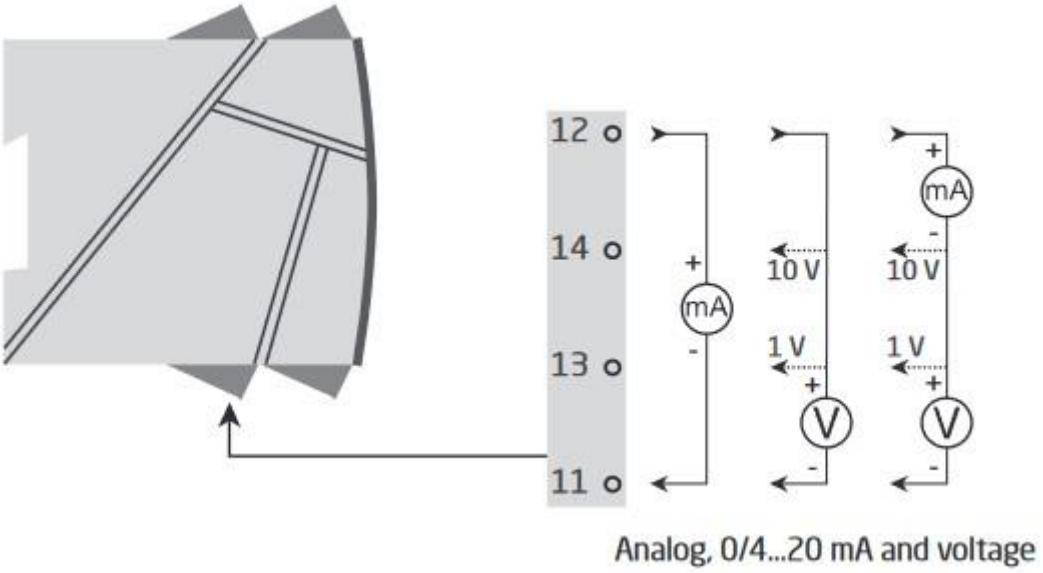

promesstec GmbH I Niedersachsenstraße 4 I D- 48465 Schüttorf I Tel.:+49 (0)5923/ 90 229 0 I Fax:+49 (0)5923/ 90 229 29
E-Mail: office@promesstec.com I Internet: www.promesstec.com

Supply:

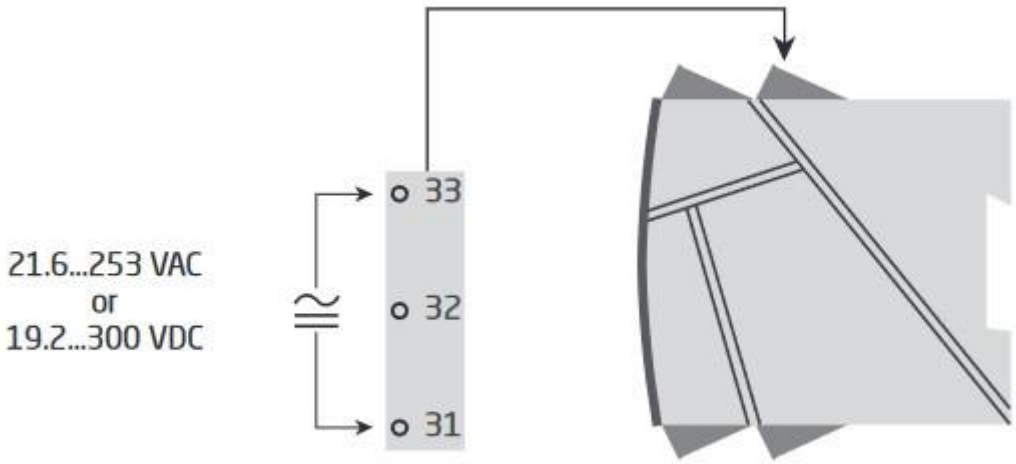

promesstec GmbH I Niedersachsenstraße 4 I D- 48465 Schüttorf I Tel.:+49 (0)5923/ 90 229 0 I Fax:+49 (0)5923/ 90 229 29
E-Mail: office@promesstec.com I Internet: www.promesstec.com

8. Front display / programming front UMU-FD 2

Functionality

The simple and easily understandable menu structure and the explanatory help texts guide you effortlessly and automatically through the configuration steps, thus making the product very easy to use. Functions and configuration options are described in the section „configuration / operating the function key“.

Application

- Communications interface for modification of operational parameters in UMU 100.
- Can be moved from one UMU 100 device to another and download the
- configuration of the first unit to subsequent units.
- Fixed display for readout of process data and status.

Technical characteristics

- LCD display with 4 lines:
  Line 1 (H = 5,57 mm) shows the Input signal.
  Line 2 (H = 3,33 mm) shows the selected engineering unit.
  Line 3 (H = 3,33 mm) shows analog output or TAG no.
  Line 4 shows status for communication.
- Programming access can be blocked by assigning a password. The password is saved in the device. In order to ensure high degree of protection against unauthorized modifications to the configuration.

promesstec GmbH I Niedersachsenstraße 4 I D- 48465 Schüttorf I Tel.:+49 (0)5923/ 90 229 0 I Fax:+49 (0)5923/ 90 229 29
E-Mail: office@promesstec.com I Internet: www.promesstec.com

9. Mounting / demounting the UMU-FD 2

1: Insert the tabs of the UMU-FD 2 into the holes at the top of the UMU 100.
2: Hinge the UMU-FD 2 down until it snap into place.

Demounting of the UMU-FD
3/4: Press the release of the UMU-FD 2 on the underside and carefully remove the UMU-FD 2.

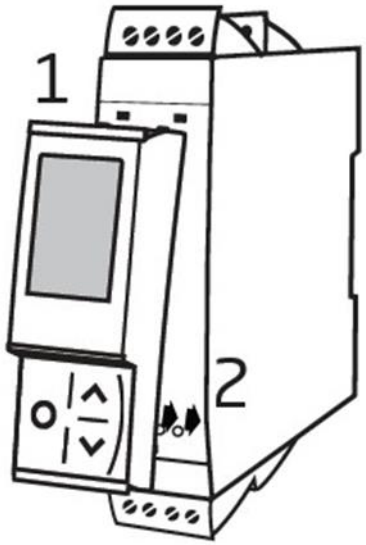

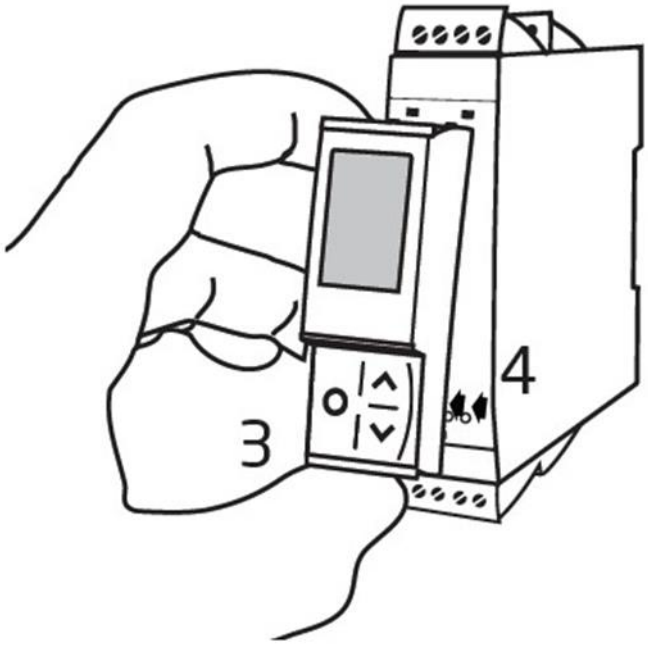

promesstec GmbH I Niedersachsenstraße 4 I D- 48465 Schüttorf I Tel.:+49 (0)5923/ 90 229 0 I Fax:+49 (0)5923/ 90 229 29
E-Mail: office@promesstec.com I Internet: www.promesstec.com

Order

UMU 100 = Universal-measuring transducer
UMU-FD 2 = Display- / programming front
UMU-CJC = CJC-connector

10. Electrical specifications

Environmental conditions

Specification area. . . . . -20°C to +60°C
Storage temperature. . . . . -20°C to +85°C
Calibration temperature . . . . . .20...28°C
Relative humidity. . . . . < 95% RF (non cond.)
Protection degree IP20
Installation in pollution degree 2 & measurement / overvoltage category II

Mechnical specification

Dimensions (HxWxD) . . . . . 109 x 23,5 x 104 mm
Dimensions (HxWxD) with UMU-FD. . . . . .109 x 23,5 x 116 / 131 mm
Weight, approx. . . . . 155 g
Weight with UMU-FD (approx.). . . . . .170 g / 185 g
DIN rail type. . . . . DIN EN 60715/35 mm
Cable cross section. . . . . 0,13...2,08 mm2 / AWG 26...14 stranded wire
Screw terminal torque. . . . . 0,5 Nm
Vibration. . . . . .IEC 60068-2-6
2...13,2 Hz . . . . . ±1 mm
13,2...100 Hz. . . . . ±0,7 g

Common electrical specifications

Supply voltage, universal . . . . . 21,6...253 VAC, 50...60 Hz or 19,2...300 VDC
Fuse . . . . . 400 mA SB / 250 VAC
Max. required power. . . . . ≤ 2,0 W
Max. power dissipation. . . . . ≤ 2,0 W
Isolation voltage, test. . . . . .2,3 kVAC
Isolation voltage, working . . . . . .250 VAC (reinforced) / 500 VAC (basic)
Programming . . . . . UMU-FD 2
Signal dynamics, input / output . . . . . .24 Bit / 16 Bit
Signal- / noise ratio. . . . . .> 60 dB (0...100 kHz)
Responsing time (0...90%, 100...10%):
Temperature Input. . . . . ≤ 1 s
mA- / V-input . . . . . ≤ 400 ms

Auxiliary supplies

2-wire-supply (terminal 44...43) . . . . . .25...16 VDC / 0...20 mA

promesstec GmbH I Niedersachsenstraße 4 I D- 48465 Schüttorf I Tel.:+49 (0)5923/ 90 229 0 I Fax:+49 (0)5923/ 90 229 29
E-Mail: office@promesstec.com I Internet: www.promesstec.com

Accuracy, the greater of general and basic values:

General values		
Input type	Absolute accuracy	Temperature coefficient
All	≤ ±0,1% of span	≤ ±0,01% of span / °C

Basic values		
Type	Basic accuracy	Temperature coefficient
mA	≤ ± 4 µA	≤ ± 0,4 µA / °C
Volt	≤ ± 20 µV	≤ ± 2 µV / °C
Pt100	≤ ± 0,2 °C	≤ ± 0,01 °C / °C
Linear resistance	≤ ± 0,1 Ω	≤ ± 0,01 Ω / °C
Potentiometer	≤ ± 0,1 Ω	≤ ± 0,01 Ω / °C
TC type: E, J, K, L, N, T, U	≤ ± 1 °C	≤ ± 0,05 °C / °C
TC type: R, S, W3, W5, LR	≤ ± 2 °C	≤ ± 0,2 °C / °C
TC type: B 85...200°C	≤ ± 4 °C	≤ ± 0,4 °C / °C
TC type: B 200...1820°C	≤ ± 2 °C	≤ ± 0,2 °C / °C

EMC – immunity influence . . . . . .< ± 0,5% of span

Extended EMC immunity:

NAMUR NE 21, A criterion, burst . . . . . .< ± 1% of span

Input specifications
RTD-, linear resistance- and potentiometer input
Input for RTD types:
Pt10, Pt20, Pt50, Pt100, Pt200, PT250, Pt300, Pt400, Pt500, Pt1000
Ni50, Ni100, Ni120, Ni1000, Cu10, Cu20, Cu50, Cu100

Input type	Min. value	Max. value	Standard
Pt10…Pt1000	-200°C	+850°C	IEC 60751
Ni50…Ni1000	-60°C	+250°C	DIN 43760
Cu10…Cu100	-200°C	+260°C	α = 0.00427
Lin.R	0 Ω	10000 Ω	-
Potentiometer	10 Ω	100 kΩ	-

promesstec GmbH I Niedersachsenstraße 4 I D- 48465 Schüttorf I Tel.:+49 (0)5923/ 90 229 0 I Fax:+49 (0)5923/ 90 229 29
E-Mail: office@promesstec.com I Internet: www.promesstec.com

Cable resistance per wire (max.), RTD. . . . . .50 Ω
Sensor current, RTD . . . . . Nom. 0,2 mA
Effect of sensor cable resistance (3- / 4-wire), RTD . . . . . .< 0,002 Ω / Ω
Sensor error detection, RTD . . . . . Ja
Short circuit detection, RTD. . . . . < 15 Ω

TE-input

Type	Min. value	Max. value	Standard
B	0°C	+1820°C	IEC 60584-1
E	-100°C	+1000°C	IEC 60584-1
J	-100°C	+1200°C	IEC 60584-1
K	-180°C	+1372°C	IEC 60584-1
L	-200°C	+900°C	DIN 43710
N	-180°C	+1300°C	IEC 60584-1
R	-50°C	+1760°C	IEC 60584-1
S	-50°C	+1760°C	IEC 60584-1
T	-200°C	+400°C	IEC 60584-1
U	-200°C	+600°C	DIN 43710
W3	0°C	+2300°C	ASTM E988-90
W5	0°C	+2300°C	ASTM E988-90
LR	-200°C	+800°C	GOST 3044-84

Cold junction compensation (CJC):
Via external sensor in connector CJC. . . . . 20...28°C ≤ ± 1°C
-20...20°C / 28...70°C ≤±2°C
Via internal CJC sensor . . . . . .±(2,0°C + 0,4°C * Δt)
Δt = internal temperature - ambient temperature
Sensor error detection, all TE-Types . . . . . .Yes
Sensor error current:
When detecting. . . . . .Nom. 2 µA
else. . . . . .0 µA

Current input
Measurement range. . . . . .0...23 mA
Programmable measurement ranges. . . . . .0...20 and 4...20 mA
Input resistance. . . . . Nom. 20 Ω + PTC 50 Ω
Sensor error detection:
Loop break 4...20 mA. . . . . Yes

Voltage input
Measurement range. . . . . 0..12 VDC
Programmable measurement ranges. . . . . 0...1 / 0,2...1 / 0...5 / 1...5 /
0...10 and 2...10 VDC
Input resistance. . . . . Nom. 10 MΩ

promesstec GmbH I Niedersachsenstraße 4 I D- 48465 Schüttorf I Tel.:+49 (0)5923/ 90 229 0 I Fax:+49 (0)5923/ 90 229 29
E-Mail: office@promesstec.com I Internet: www.promesstec.com

Output specifications

Current output

Signal range (span) . . . . . .0...23 mA
Programmable signal ranges . . . . . 0...20 / 4...20 / 20...0 and 20...4 mA
Load (max.). . . . . ≤ 800 Ω
Load stability. . . . . ≤ 0,01% of span / 100 Ω
Sensor error detection . . . . . .0 / 3,5 / 23 mA / none
NAMUR NE 43 Up- / Downscale . . . . . .23 mA / 3,5 mA
Output limitation:
4...20 and 20...4 mA signals . . . . . 3,8...20,5 mA
0...20 and 20...0 mA signals . . . . . 0...20,5 mA
Current limit . . . . . ≤ 28 mA

Voltage output

Signal range . . . . . 0...10 VDC
Programmable signal rages . . . . . 0...1 / 0,2...1 / 0...10 / 0...5 / 1...5 / 2...10 / 1...0 / 1...0,2 / 5...0 / 5...1 / 10...0 and 10…2 V
Load (min.) . . . . . 500 kΩ

Of span. = of the currently selected measurement range

promesstec GmbH I Niedersachsenstraße 4 I D- 48465 Schüttorf I Tel.:+49 (0)5923/ 90 229 0 I Fax:+49 (0)5923/ 90 229 29
E-Mail: office@promesstec.com I Internet: www.promesstec.com

11. Visualisation in the UMU-FD 2

Sensor error detection and input signal outside range

Sensor error check:		
Device	Configuration	Sensor error detection:
UMU 100-A-B	OUT.ERR=NONE.	OFF
	Else:	ON

Outside range readout (IN.LO, IN.HI): If the valid of the A/D converter or the polynomial is exceeded			
Input	Range	Readout	Limit
Volt	0…1 V / 0,2…1 V	IN.LO	< - 25 mV
		IN.HI	> 1,2 V
	0…10 V / 2…10 V	IN.LO	< - 25 mV
		IN.HI	>12 V
CURR	0…20 mA / 4…20 mA	IN.LO	< - 1,05 mA
		IN.HI	> 25.05 mA
LIN.R	0…800Ω	IN.LO	< 0 Ω
		IN.HI	> 1075 Ω
	0…10 kΩ	IN.LO	< 0 Ω
		IN.HI	< 110 kΩ
POTM	-	IN.LO	< - 0,5 %
		IN.HI	> 100,5 %
TEMP	TC / RTD	IN.LO	< temperature range -2°C
		IN.HI	> temperature range +2°C

Display readout below min. / above max. (-1999, 9999):			
Input	Range	Readout	Limit
All	All	-1999	Display readout <-1999
		9999	Display readout > 9999

Sensor error detection limits

Sensor error detection (SE.BR, SE.SH):			
Input	Range	Readout	Limit
CURR	Loop break (4…20 mA)	SE.BR	<= 3.6 mA; > = 21 mA
POTM	All, SE.BR on all 3-wire	SE.BR	> ca. 126 kΩ
LIN.R	0…800 Ω	SE.BR	> ca. 875 Ω
	0…10 kΩ	SE.BR	> ca. 11 kΩ
TEMP	TC	SE.BR	> ca. 750 kΩ / (1.25 V)
	RTD, 2-, 3-, and 4-wire No SE.SH for Cuxx, Pt10, PT20 and Pt50	SE.BR	> Ca. 15 kΩ
		SE.SH	< ca. 15 kΩ

pro UMU 100 GmbH I Niedersachsenstraße 4 I D- 48465 Schüttorf I Tel.:+49 (0)5923/ 90 229 0 I Fax:+49 (0)5923/ 90 229 29
E-Mail: office@promesstec.com I Internet: www.promesstec.com

Error indications

Readout at hardware error		
Error search	Readout	Cause
Test of internal CJC sensor	CJ.ER	CJC sensor defect of temperature outside range
Checksum test of the configuration in FLASH	FL.CO	Error in FLASH
Check measurement of analog output current	AO.ER	1) No load on the current output (only S4…20 / S20…4 mA)
Communications test UMU 100 / UMU-FD	NO.CO	Connection error
Check that input signal matches input configuration	IN.ER	1)Error levels on input
Check that saved configuration in UMU-FD matches device	TY.ER	Configuration is not UMU-FD

!	All error indications in the display flash once per second. The help text explains the error. If the error is a sensor error, the display backlight flashes as well – this is acknowledged (stopped) by pushing the OK button.
1)	The error is reset by switching off and then switching on the supply voltage to the device.

promesstec GmbH I Niedersachsenstraße 4 I D- 48465 Schüttorf I Tel.:+49 (0)5923/ 90 229 0 I Fax:+49 (0)5923/ 90 229 29
E-Mail: office@promesstec.com I Internet: www.promesstec.com

12. Connections

Supply

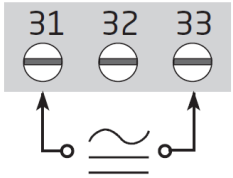

Inputs:

RTD, 2-wire

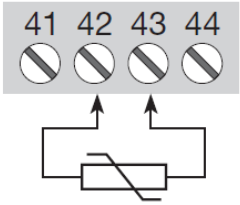

RTD, 3- / 4-wire

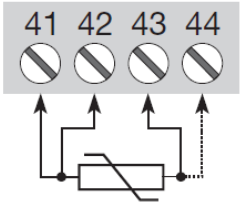

TC, internal CJC sensor

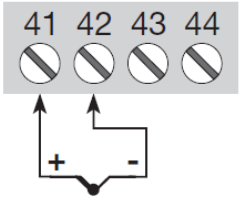

Resistance, 2-wire

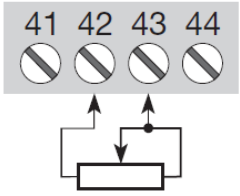

Resistance, 3- / 4-wire

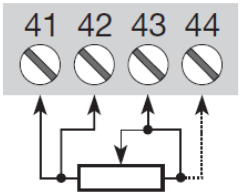

Potentiometer

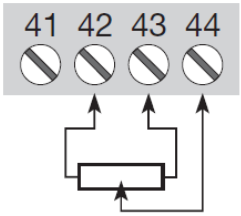

2-wire transmitter

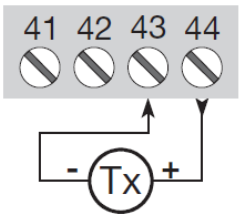

Current

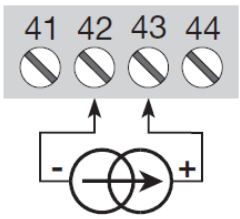

Voltage

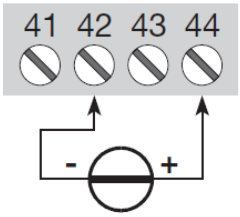

*TC, CJC connector

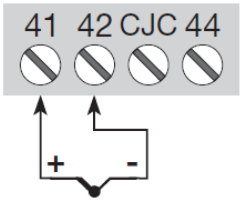

* Order separately:
CJC connector 5910

Ausgänge:

Current

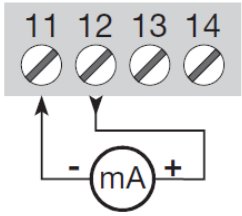

Voltage, 1 V

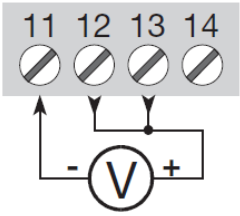

Voltage, 10 V

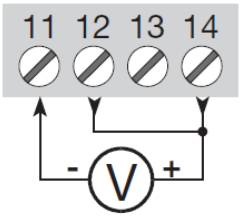

promesstec GmbH I Niedersachsenstraße 4 I D- 48465 Schüttorf I Tel.:+49 (0)5923/ 90 229 0 I Fax:+49 (0)5923/ 90 229 29
E-Mail: office@promesstec.com I Internet: www.promesstec.com

13. Block diagram

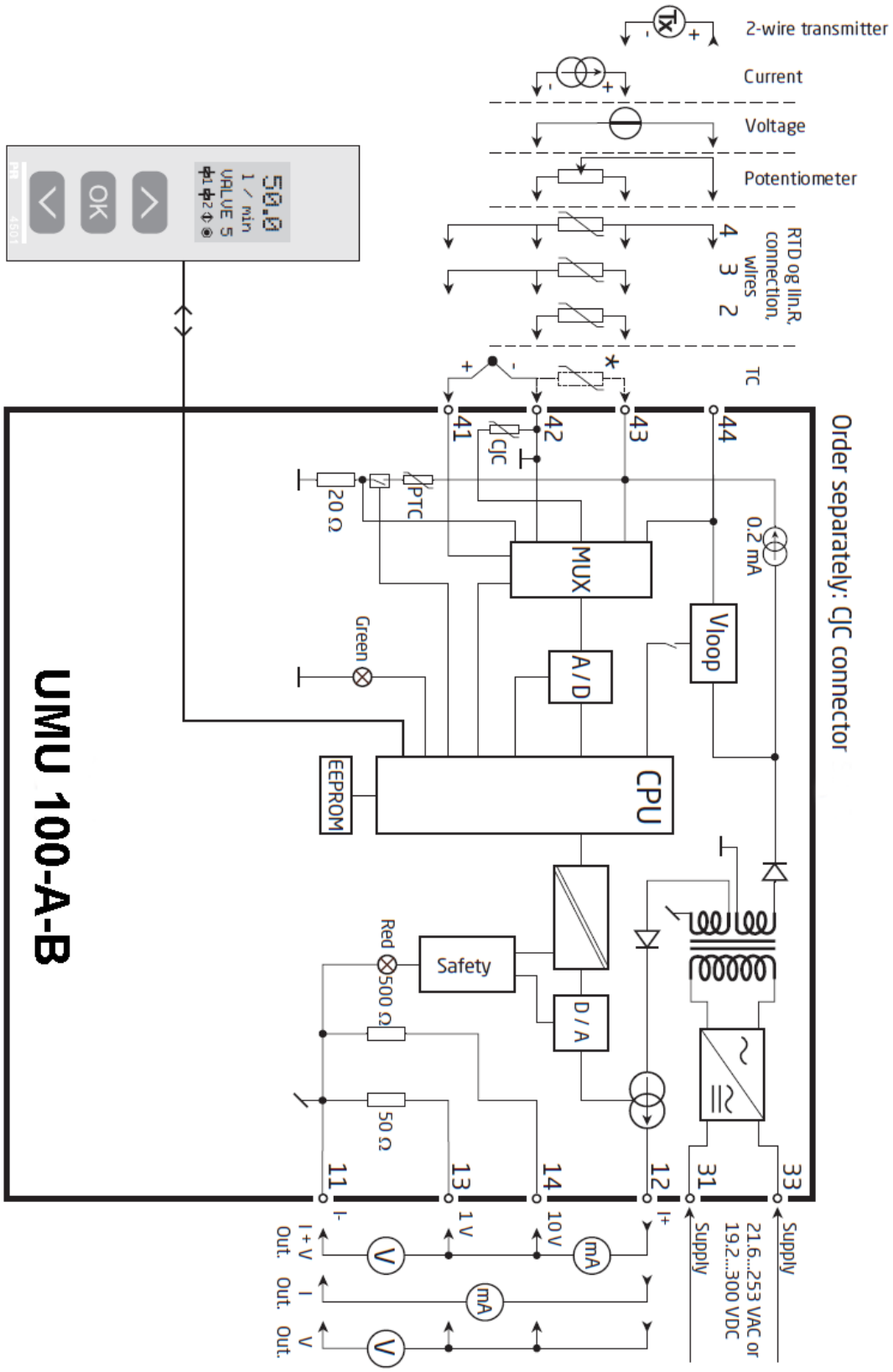

promesstec GmbH I Niedersachsenstraße 4 I D- 48465 Schüttorf I Tel.:+49 (0)5923/ 90 229 0 I Fax:+49 (0)5923/ 90 229 29
E-Mail: office@promesstec.com I Internet: www.promesstec.com

14. Configuration / operating the function keys

14.1 Documentation for routing diagram

General

When configuration the UMU 100, you will be guided through all parameters and you can choose the settings which fit the application. For each menu there is a scrolling help text which is automatically shown in line 3 on the display.

Configuration is carried out by use of the 3 function keys:

- ⌃ will increase the numerical value or choose the next parameter
- ⌄ will decrease the numerical value or choose the previous parameter
- OK will save the chosen value and proceed to the next menu

When configuration is completed, the display will return to the default state 1.0.. Pressing and holding OK will return to the previous menu or return to the default state (1.0) without saving the changed values or parameters.
If no key is activated for 1 minute, the display will return to the default state (1.0) without saving the changed values or parameters.

14.2 Further explanations

Password protection:
Programming access can be blocked by assigning a password. The password is saved in the device in order the ensure a high degree of protection against unauthorized modifications to the configuration. If the configured password is not known, please contact **promesstec GmbH**

Signal- and Sensor error via display per UMU-FD 2:
Sensor error (see limits in the table), is displayed as SE.BR (sensor break) or SE.SH (sensor short). Signals, outside the selected range (not sensor error, see table for limits), are displayed as IN.LO (indicating low input) or IN.HI (indicating high input) signal. The error indication is displayed in line 3 as text and at the same time the backlight flashes. Line 4 of the display is a status line which displays COM (flashing bullet) indicating correct functioning of UMU-FD 2 and arrow up/down which indicates tendency readout of the input signal.

14.3 Signal- and Sensor error indication without display front

Status of the unit also be read from red/green LED in the front of the device.

Green flashing LED 13 Hz indicates normal operation.
Green flashing LED 1 Hz indicates sensor error.
Steady red LED indicates internal error.

promesstec GmbH I Niedersachsenstraße 4 I D- 48465 Schüttorf I Tel.:+49 (0)5923/ 90 229 0 I Fax:+49 (0)5923/ 90 229 29
E-Mail: office@promesstec.com I Internet: www.promesstec.com

14.4 Advanced functions

The unit gives access to a number of advanced functions which can be reached by answering „Yes“ to the point „ADV.SET“.

Memory (MEM): In the memory menu you can save the configuration of the device in the UMU-FD, and then move the UMU-FD onto another device of the same type and download the configuration in the new device.

Display setup (DISP): Here you can adjust the brightness contrast and the backlight. Setup of TAG numbers with 6 alphanumerics. Selection of functional readout in line 3 of the display – choose between readout of analogoutput or tag no..

Two-point process calibration (CAL): The device can be process-calibrated in 2 points to fit a given input signal. A low input signal (not necessarily 0%) is applied and the actual value is entered via UMU-FD. Then a high signal (not necessarily 100%) is applied and the actual value is entered via UMU-FD. If you accept to use the calibration, the device will work according to this new adjustment. If you later reject this menu point or choose another type of input signal the device will return to factory calibration.

Process simulation function (SIM): In the menu point “EN.SIM” it is possible to simulate an input ignal by means of the arrow keys and thus control the output signal up or down. Ou must exit the menu by pressing OK (no time out). The Simulation function exits automatically, if the UMU-FD is detached.

Password (PASS): Here ou can choose a pasword between 0000 and 9999 in order to protect the unit against unauthorized modifications to the automatically. If the UMU-FD is detached.

Language (LANG): In the menu ”lang.setup” you can choose between 7 different language versions of help tets that will appear in the menu. You can choose between: UK, DE, FR, IT, ES, SE and DK.

Auto diagnosis
The device performs an advanced auto diagnosis of the internal circuits. The following possible errors can by displayed in the front unit UMU-FD.

CJ.ER	-	CJC-sensor defect or CJC temperature outside range
FL.ER	-	Flash error
AO.ER	-	No load on the current output (only for S4...20 mA / S20...4 mA)
NO.CO	-	Connection error
IN.ER	-	Error levels on input
TY.ER	-	Configuration in UMU-FD does not match this product type

Selection of units
After choosing the input signal tpe you can choose which proces unit should be displayes in text line 2 (see table). By selection of temperature input the process value is

promesstec GmbH I Niedersachsenstraße 4 I D- 48465 Schüttorf I Tel.:+49 (0)5923/ 90 229 0 I Fax:+49 (0)5923/ 90 229 29
E-Mail: office@promesstec.com I Internet: www.promesstec.com

always displayed in °C and °F. This is selected in the menu point after selection of temperature input.

CJC
In the CJC menu you can choose between CC connector and internal cold junction compensation. The UMU-CJC connecter must be orderd seperately.

promesstec GmbH I Niedersachsenstraße 4 I D- 48465 Schüttorf I Tel.:+49 (0)5923/ 90 229 0 I Fax:+49 (0)5923/ 90 229 29
E-Mail: office@promesstec.com I Internet: www.promesstec.com

15. Routing diagram

If no key is activated for 1 minute, the display will return to the default state 1.0 without saving configuration changes.

Increase value / choose next parameter
Decrease value / choose previous parameter
Save the chosen value and proceed to the next menu
Hold Back to previous menu / return to menu 1.0 without saving.

promesstec GmbH I Niedersachsenstraße 4 I D- 48465 Schüttorf I Tel.:+49 (0)5923/ 90 229 0 I Fax:+49 (0)5923/ 90 229 29
E-Mail: office@promesstec.com I Internet: www.promesstec.com

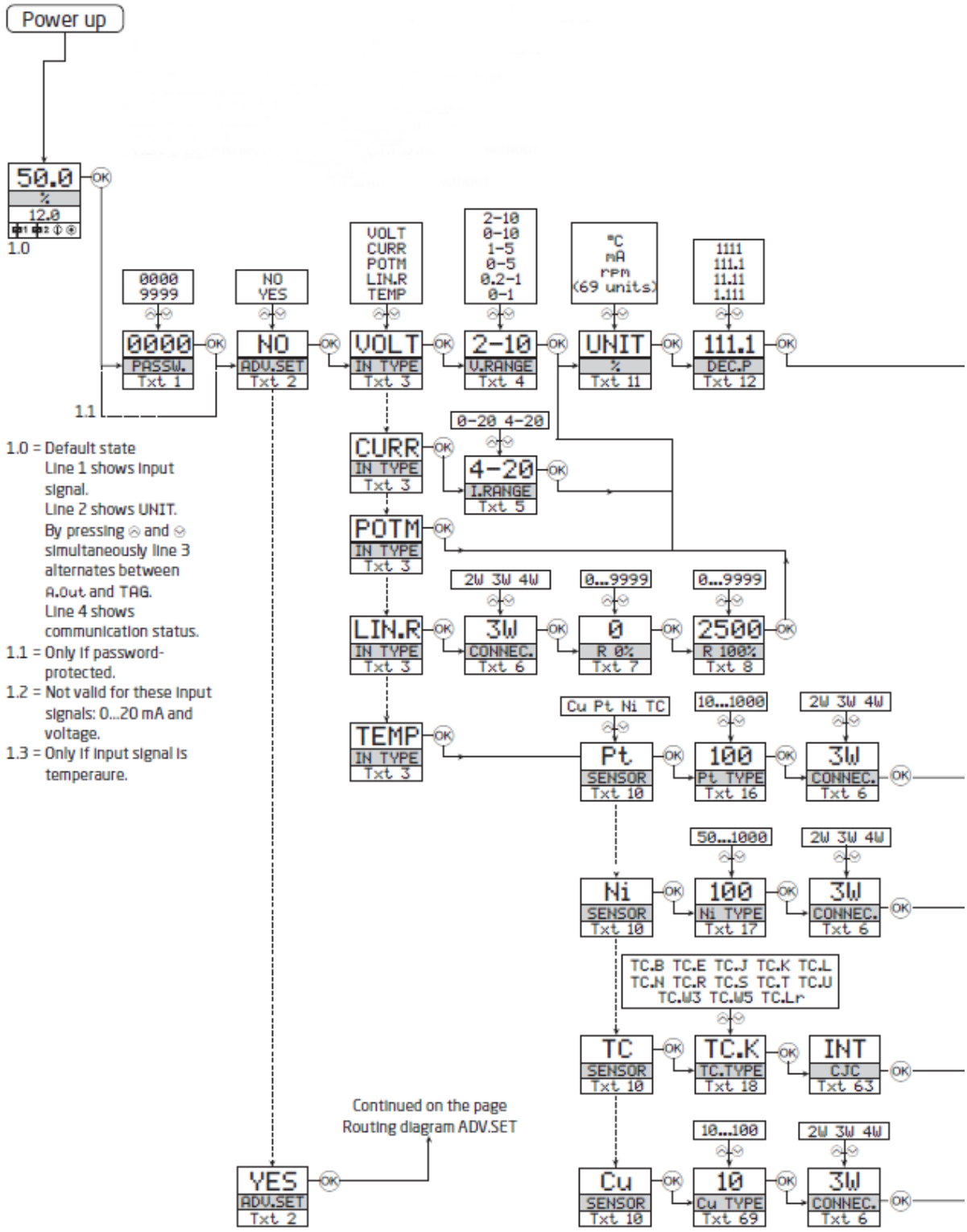

1.0 = Default state
Line 1 shows input signal.
Line 2 shows UNIT.
By pressing ⌃ and ⌄ simultaneously line 3 alternates between A.Out and TAG.
Line 4 shows communication status.

1.1 = Only if password-protected.

1.2 = Not valid for these input signals: 0...20 mA and voltage.

1.3 = Only if input signal is temperaure.

promesstec GmbH I Niedersachsenstraße 4 I D- 48465 Schüttorf I Tel.:+49 (0)5923/ 90 229 0 I Fax:+49 (0)5923/ 90 229 29
E-Mail: office@promesstec.com I Internet: www.promesstec.com

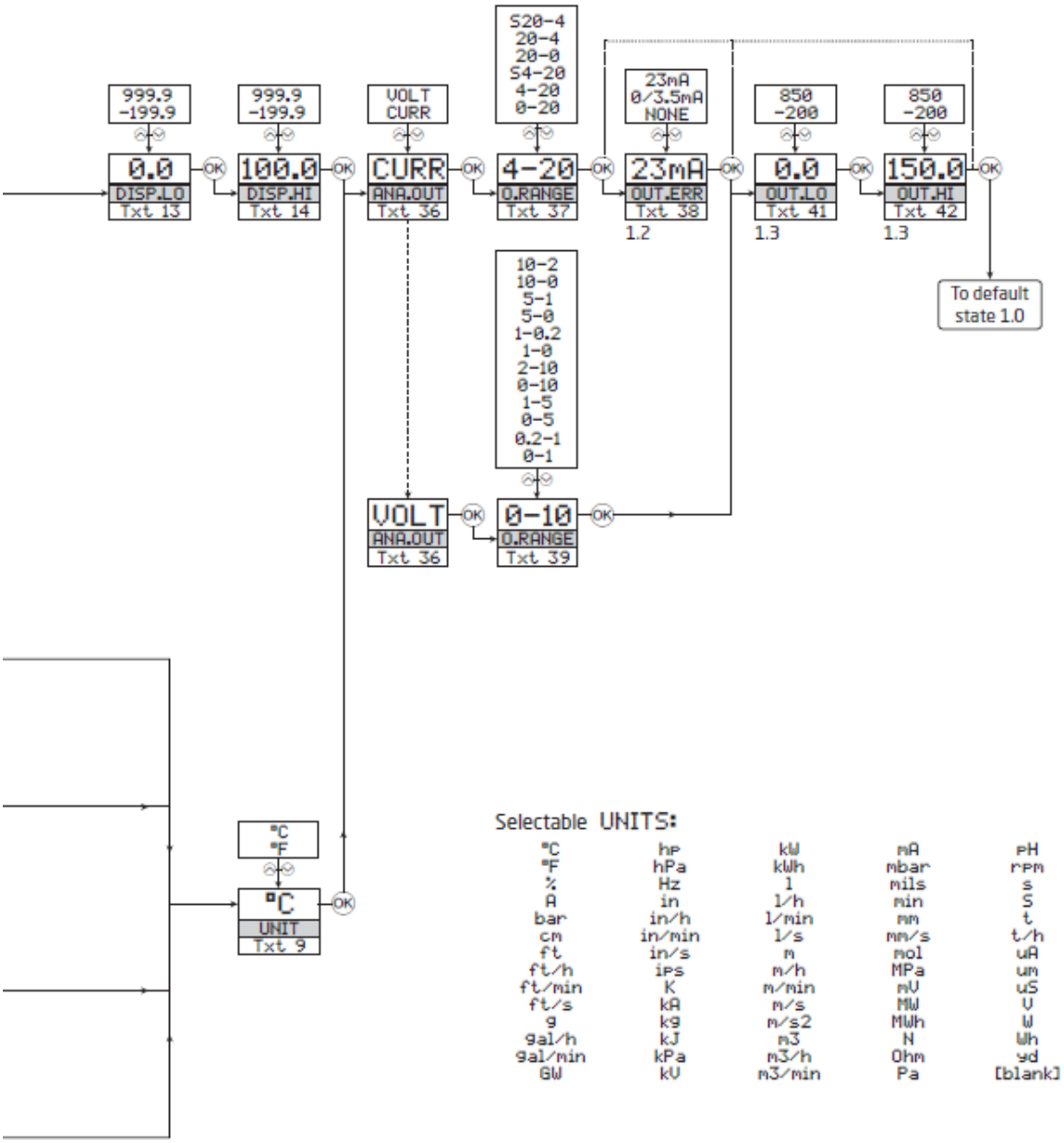

promesstec GmbH I Niedersachsenstraße 4 I D- 48465 Schüttorf I Tel.:+49 (0)5923/ 90 229 0 I Fax:+49 (0)5923/ 90 229 29
E-Mail: office@promesstec.com I Internet: www.promesstec.com

15.1 Routing diagram, advanced settings (ADV.SET)

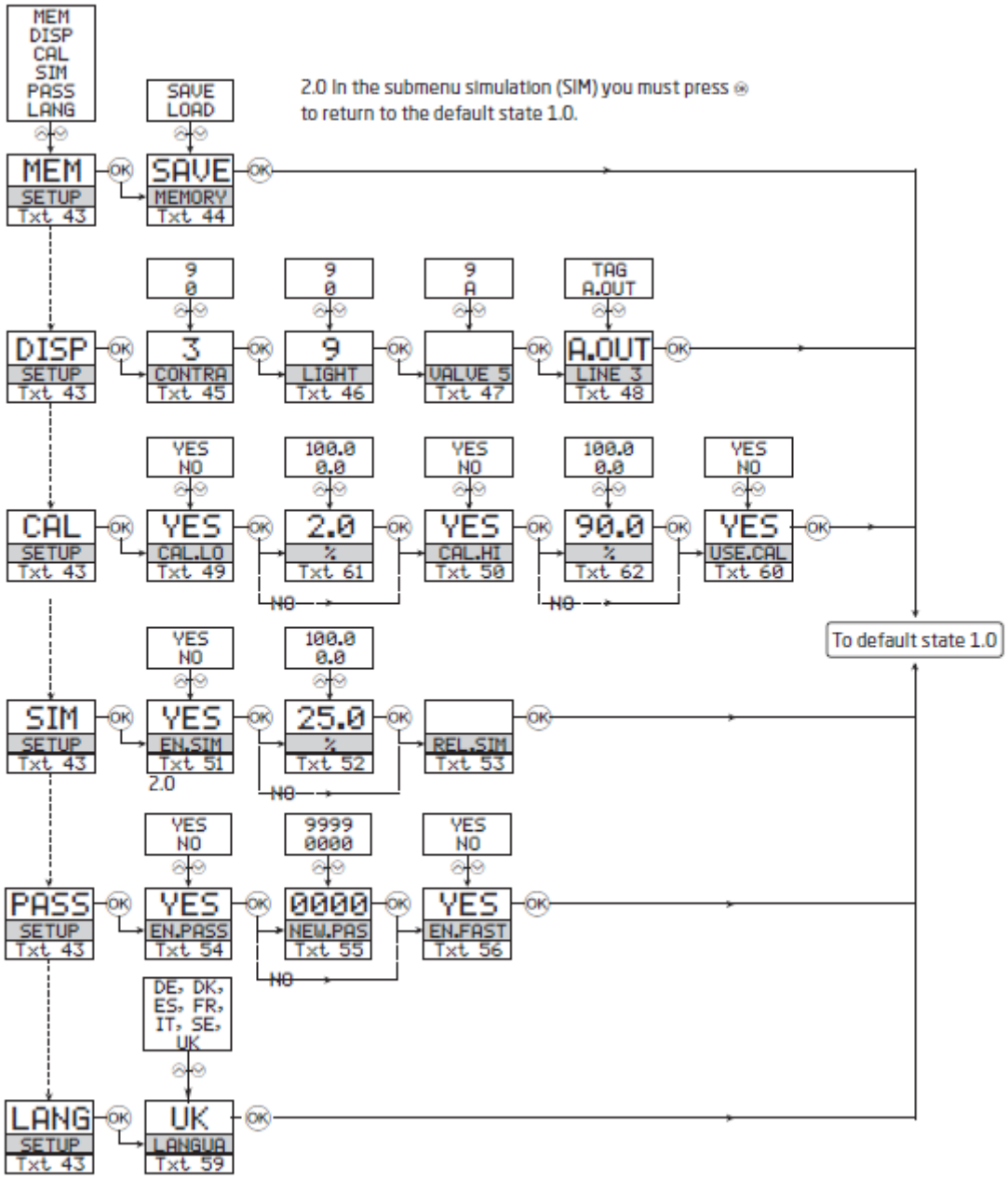

promesstec GmbH I Niedersachsenstraße 4 I D- 48465 Schüttorf I Tel.:+49 (0)5923/ 90 229 0 I Fax:+49 (0)5923/ 90 229 29
E-Mail: office@promesstec.com I Internet: www.promesstec.com

16. Help text overview

[01] Set correct password
[02] Enter advanced setup menu?
[03] Select temperature input
Select potentiometer Input
Select linear resistance Input
Select current Input
Select voltage Input
[04] Select 0.0-1 V Input range
Select 0,2-1 V Input range
Select 0-5 V Input range
Select 1-5 V Input range
Select 0-10 V Input range
Select 2-10 V Input range
[05] Select 0-20 mA Input range
Select 4-20 mA Input range
[06] Select 2-wire sensor connection
Select 3-wire sensor connection
Select 4-wire sensor connection
[07] Set resistance value low
[08] Set resistance value high
[09] Select Celsius as temperature unit
Select Fahrenheit as temperature unit
[10] Select TC sensor type
Select Ni sensor type
Select Pt sensor Typ
Select Cu sensor type
[11] Select display unit
[12] Select decimal point position
[13] Set display range low
[14] Set display range high
[16] Select Pt10 as sensor type
Select Pt20 as sensor type
Select Pt50 as sensor type
Select Pt100 as sensor type
Select Pt200 as sensor type
Select Pt250 as sensor type
Select Pt300 as sensor type
Select Pt400 as sensor type
Select Pt500 as sensor type
Select Pt1000 as sensor type
[17] Select Ni50 as sensor type
Select Ni100 as sensor type
Select Ni120 as sensor type
Select Ni1000 as sensor type
[69] Select Cu10 as sensor type
Select Cu20 as sensor type
Select Cu50 as sensor type
Select Cu100 as sensor type
[18] Select TC-B as sensor type
Select TC-E as sensor type
Select TC-J as sensor type
Select TC-K as sensor type
Select TC-L as sensor type
Select TC-N as sensor type
Select TC-R as sensor type
Select TC-S as sensor type
Select TC-T as sensor type
Select TC-U as sensor type
Select TC-W3 as sensor type
Select TC-W5 as sensor type
Select TC-Lr as sensor type
[36] Select current as analog output type
Select voltage as analog output type
[37] Select 0-20 mA output range
Select 4-20 mA output range
Select 4-20 mA with safety readback
Select 20-0 mA output range
Select 20-4 mA output range
Select 20-4 mA with safety readback
[38] Select no error action – output undefined at errror
Select downscale at error
Select NAMUR NE43 downscale at error
Select NAMUR NE43 Upscale at error
Select 0.0-1 V output range
[39] Select 0,2-1 V output range
Select 0-5 V output range
Select 1-5 V output range
Select 0-10 V output range
Select 2-10 V output range
Select 1-0,0 V output range
Select 1-0,2 V output range
Select 5-0 V output range
Select 5-1 V output range
Select 10-0 V output range
Select 10-2 V output range
Set temperature for analog output LOW
[41] Set temperature for analog output HIGH
[42] Enter password setup
[43] Enter simulation mode
Perform process calibration
Enter display setup
Perform memory operations
[44] Load saved configuration into UMU 100
Save UMU 100 configuration in UMU-FD
[45] Adjust LCD contrast
[46] Adjust LCD backlight
[47] Write a 6-charcter device TAG
[48] Analog output value is shown in display line 3
Device TAG is shown in display line 3
[49] Calibrate Input Low to process value?
[50] Calibrate Input High to process value?
[51] Enable simulation mode?
[52] Set the input simulation value
[54] Enable password protection?
[55] Set new password
[59] Select language
[60] Use process calibration values?
[61] Set value for low calibration point
[62] Set value for high calibration point
[63] Select CJC connector (accessory)
Select internal temperature sensor

promesstec GmbH I Niedersachsenstraße 4 I D- 48465 Schüttorf I Tel.:+49 (0)5923/ 90 229 0 I Fax:+49 (0)5923/ 90 229 29
E-Mail: office@promesstec.com I Internet: www.promesstec.com

17. Maintenance, Dismounting, Return, Liability, Cleaning and Disposal

17.1 Maintenance, Dismounting

Warnung

Residual media in dismounted instruments can result in a risk of personnel, the environment and equipment. Take sufficient precautionary measures.

Warnung

There is a risk of burns. Let the instrument cool down sufficiently before dismounting. During dismounting there is a risk of dangerously hot pressure media escaping.

17.2 Return

Warnung

For return of the device use the original packaging or similar.
As protection against damage can be used, for example, antistatic film, insulating material, labeling as a sensetive measuring device.

17.3 Liability

To the extent the instructions in this manual are not strictly observed, the customer cannot advance a demad against promesstec GmbH that would otherwise exist according to the concluded sales agreement.

17.4 Cleaning

!

Before cleaning the device, disconnect the electrical connection.
Clean the device with damp towel.
Do not bring the electrical connection into contact with dampness.

When disconnected, the device may be cleaned with a cloth moistened with destilled water.

17.5 Disposal

i

Dispose of device componets and packaging materials in an environmentally friendly manner in accordance with the country specific waste treatment and disposal regulations.

promesstec GmbH I Niedersachsenstraße 4 I D- 48465 Schüttorf I Tel.:+49 (0)5923/ 90 229 0 I Fax:+49 (0)5923/ 90 229 29
E-Mail: office@promesstec.com I Internet: www.promesstec.com

Safety instructions

Improper use or operation may result in personal injury and/or property damage.

Control of the device

The devices are checked before shipment and shipped in perfect condition. If any damage is visible on the device, we recommend a precise inspection of the transport packaging. In case of damage, please inform the supplier immediately.

18. Installation

Only technicans who are familiar with the technical terms, warnings, and instructions in the manual and how are able to follow these, should connect the device.

Should there be any doubt as to the correct handling of the device, please contact your local distributor. However, you can also contact **promesstec GmbH** directly.

Mounting and connection of the device should comply with ational legislation for mounting of electric materials, i.e. wire cross section, protective fuse, and location. Descriptions of input / output and supply connections are shown in the block diagram and side label.

The following applies to devices that are permanently connected to a hazardous voltage:

The maximum size of the back-up fuse shall be 10 A and shall be easily accessible and close to the equipment, together with a breaker switch. The breaker switch shall be marked in such a way that there can be no doubt that it interrupts the voltage for the device.

promesstec GmbH I Niedersachsenstraße 4 I D- 48465 Schüttorf I Tel.:+49 (0)5923/ 90 229 0 I Fax:+49 (0)5923/ 90 229 29
E-Mail: office@promesstec.com I Internet: www.promesstec.com

19. Order code

order code: UMU 100… **order example: UMU 100-A-B**

Limit relay

-A without limit relay
-B with 2 limit relays

Analog output

-A without analog output
-B with analog output

promesstec GmbH I Niedersachsenstraße 4 I D- 48465 Schüttorf I Tel.:+49 (0)5923/ 90 229 0 I Fax:+49 (0)5923/ 90 229 29
E-Mail: office@promesstec.com I Internet: www.promesstec.com

User manual

Universal measuring transducer UMU 100-B-B

Version 2.2.1

promesstec GmbH I Niedersachsenstraße 4 I D- 48465 Schüttorf I Tel.:+49 (0)5923/ 90 229 0 I Fax:+49 (0)5923/ 90 229 29
E-Mail: office@promesstec.com I Internet: www.promesstec.com

Content

promesstec GmbH I Niedersachsenstraße 4 I D- 48465 Schüttorf I Tel.:+49 (0)5923/ 90 229 0 I Fax:+49 (0)5923/ 90 229 29
E-Mail: office@promesstec.com I Internet: www.promesstec.com

promesstec GmbH I Niedersachsenstraße 4 I D- 48465 Schüttorf I Tel.:+49 (0)5923/ 90 229 0 I Fax:+49 (0)5923/ 90 229 29
E-Mail: office@promesstec.com I Internet: www.promesstec.com

1. General

1.1 For information

- These operating manual provides important information on handling the measuring instrument. A prerequisite for safe working is the observance of all specified safety notes and instructions for action.
- The qualified personnel must have read and understood these operating instructions before mounting and starting up the sensor.
- These operating manual is an essential part of the product. Therefore, keep them in a place that is accessible to all users at all times, close to the place of use.
- The local regulations and safety rules applicable to the area of application of the sensor must be observed.
- If the serial number on the type plate is no longer legible (e.g. due to mechanical damage), traceability is no longer ensured.
- The sensors described in the operating manual are developed and manufactured according to the latest findings. All components are subject to strict quality and environmental criteria during production.
- The manufacturer is not liable if damage occurs due to improper use, non-observance of these operating manual, use of insufficiently qualified personnel and unauthorized modifications to the sensor..

1.2 Signs and abbreviations

Warning!
Non-observance can lead to injuries to persons and/or destruction of the device. There may be danger to life.

Attention!
Non-observance can lead to incorrect operation of the device or damage to property.

Information!
Non-observance can influence the operation of the device or cause undesired device reactions.

Danger!
If the safety instructions are not observed, there is a risk of serious or fatal injury from electric current.

promesstec GmbH I Niedersachsenstraße 4 I D- 48465 Schüttorf I Tel.:+49 (0)5923/ 90 229 0 I Fax:+49 (0)5923/ 90 229 29
E-Mail: office@promesstec.com I Internet: www.promesstec.com

Warnung

Warning!
A dangerous situation may possibly occur, which can lead to burns due to hot surfaces or liquids if they are not avoided.

Warnung

Warning!

The device is desgined for connection to hazardous electric voltages. Ignoring this warning can result in severe personal injury or mechanical damage. To avoid the risk of electric shock and fire, the safety instructions of this guide must be observed and the guidlines followed. The specifications must not be exeeded, and the device must only be applied as described in the following. Prior to the commissioning of the device, this installation guide must be examined carefully. Only qualified personnel (technicians) should install this device. If the equipment is used in a manner not specified by the manufacturer, the protection provided by the equipment.

Gefahr

Warning!

Until the device is fixed, do not connect hazardous voltages to the device. The following should only be carried out on a disconnected device and under ESD safe conditions:

- General mounting, connection and disconnection of wires.
- Troubleshooting the device.

Warnung

Warning!

To keep the safety distances, the relay contacts on the device must not be connected to both hazardous and non-hazardous voltages at the same time.

!

Warning!

Do not open the front plate of the device as this will cause damage to the connector for the display/ programming front UMU-FD 2. The device contains no DIP-switches or Jumpers. The device must be mounted on a DIN rail according to DIN 60715.

CE

The CE-Mark proves the compliance of the device with the essential requirements of the directives.

promesstec GmbH I Niedersachsenstraße 4 I D- 48465 Schüttorf I Tel.:+49 (0)5923/ 90 229 0 I Fax:+49 (0)5923/ 90 229 29
E-Mail: office@promesstec.com I Internet: www.promesstec.com

The double insulation symbol shows that the device is protected by double or reinforced insulation.

2. Transport, packaging and storage

2.1 Transport

Inspect the device for any damage that may have occurred during transport. Report obvious damage immediately.

2.2 Packaging

Do not remove the packaging until immediately before installation. Keep the packaging, as this provides optimum protection during transport (e.g. changing installation location, return shipment).

2.3 Storage

Avoid the following influences during prolonged storage:

- Direct sunlight or proximity to hot objects
- Mechanical vibration, mechanical shock (hard set-up)
- Soot, steam, dust and corrosive gases

If possible, store the device in the original packaging or appropriate packaging.

promesstec GmbH I Niedersachsenstraße 4 I D- 48465 Schüttorf I Tel.:+49 (0)5923/ 90 229 0 I Fax:+49 (0)5923/ 90 229 29
E-Mail: office@promesstec.com I Internet: www.promesstec.com

3. Safety instructions

! Further important safety instructions can be found in the individual chapters.

Definitions:

Hazardous voltage have been defined as the ranges: 75 to 1500 Volt DC and 50 to 1000 Volt AC.

Technicians are qualified persons educated or trained to mount, operate, and also trouble-shoot technically correct and in accordance with safety regulations.

Operators, being familiar with the contents of this manual, adjust and operate the knobs or potentiometers during normal operation.

Receipt and unpackaging
Unpack the device without damaging it and check whether the device type corresponds to the one ordered. The packaging should always follow the device until this has been permanently mounted.

3.1 Intended product use

Environmet:

Avoid direct sun light, dust, high temperatures, mechanical vibrations and shock, and rain and heavy moisture. If necessary, heating in excess of the stated limits for ambient temperaturs should be avoided by way of ventilation. The device must be installed in pollutation degree 2 or better.

promesstec GmbH I Niedersachsenstraße 4 I D- 48465 Schüttorf I Tel.:+49 (0)5923/ 90 229 0 I Fax:+49 (0)5923/ 90 229 29
E-Mail: office@promesstec.com I Internet: www.promesstec.com

3.2 Personal qualification

Warnung

Risk of injury due to insufficient qualification Improper handling can lead to considerable personal injury and property damage.
The activities described in these operating manual may only be performed by qualified personnel with the following qualifications.
Keep unqualified personnel away from the hazardous areas.

For mounting and commissioning of the sensor, these persons must be familiar with the applicable country-specific directives and standards, and have the appropriate qualification. You must have knowledge of measurement and control technology, be familiar with electrical circuits and be able to carry out the work described and recognize possible hazards independently. Depending on the operating conditions, other knowledge may also be required, e.g. about aggressive media.

3.3 Special hazards

Warnung

Comply with country-specific regulations (e.g. standards) and observe the applicable standards and directives for special applications (e.g. for hazardous media such as acetylene, flammable or toxic substances, and for refrigeration systems and compressors).
Failure to observe the relevant regulations can result in serious bodily injury and damage to property!

Warnung

Electrostatic discharge (ESD) protection is required. Proper use of grounded work surfaces and personal wrist straps is required when working with open circuits (printed circuit boards) to prevent damage to sensitive electronic components from electrostatic discharge.

Gefahr

There is danger to life from electric current. There is an immediate risk of fatal injury if live parts are touched. Installation and assembly of electrical equipment may only be carried out by qualified electricians. When operating with a defective power supply unit (e.g. short-circuit from mains voltage to output voltage), life-threatening voltages can occur at the device.

Warnung

Residual media in devices that have been removed can endanger persons, the environment and equipment. Sufficient precautions must be taken. This device must not be used in safety or emergency stop equipment. Incorrect applications of the device can lead to injuries. In the event of a fault, aggressive media at extreme temperatures and under high pressure or vacuum may be present at the device.

promesstec GmbH I Niedersachsenstraße 4 I D- 48465 Schüttorf I Tel.:+49 (0)5923/ 90 229 0 I Fax:+49 (0)5923/ 90 229 29
E-Mail: office@promesstec.com I Internet: www.promesstec.com

4. Commissioning and operation

4.1 Before mounting

Check whether a completely assembled transmitter has been supplied.
Inspect the device for any damage that may have occurred during transport. If such damage is present, notify the carrier and supplier immediately.
Keep the packaging, as it provides optimum protection during transport.
Make sure that the housing and the connection contacts are not damaged.

4.2 Mouning / Installation / configuration

- Very low power consumption means units can be mounted side by side without an air gap - even at 60°C ambient temperature.
- Configuration, monitoring, 2-point-prozess calibration and more are accomplished using UMU-FD detachable display.
- All programming can be password-protected.

Calibration and adjustment
During calibration and adjustment, the measuring and connection of external voltages must be carried out according to the specifications of this manual. The technician must use tools and instruments that are safe to use.

Normal operation
Operators are only allowed to adjust and operate device that are safety fixed in panels, etc., thus avoiding the danger of personal injury and damage. This means there is no electrical shock hazard, and the device is easily accessible.

promesstec GmbH I Niedersachsenstraße 4 I D- 48465 Schüttorf I Tel.:+49 (0)5923/ 90 229 0 I Fax:+49 (0)5923/ 90 229 29
E-Mail: office@promesstec.com I Internet: www.promesstec.com

5. How to demount the UMU 100-B-B

First, remember to demount the connectors with hazardous voltages.

The device is detached from the DIN rail by moving the bottom lock down.

When the front LED lights red / display shows AO.ER

The UMU 100 has been developed with a high safety level. Therefore, a continuous measurement of the outgoing current is carried out on a 4…20mA output signal. If the current output signal is different from the internal calculated output value or the current output is 0 (due to e.g. an open circuit breakage), an error mode switches on the red front LED and disables the relays. This function is not a default option but must be actively selected via the programming menu (S4-20 &S20-4). The error mode can only be reset by switching off and then switching on the supply voltage to the device.

promesstec GmbH I Niedersachsenstraße 4 I D- 48465 Schüttorf I Tel.:+49 (0)5923/ 90 229 0 I Fax:+49 (0)5923/ 90 229 29
E-Mail: office@promesstec.com I Internet: www.promesstec.com

6. Universal-transducer UMU 100-B-B

- Input for RTD, TC, Ohm, potentiometer, mA and V
- 2-wire-supply > 16 V
- FM-approved for installation in Div. 2
- Output for current, voltage and 2 relays
- Universel AC or DC supply

Application

- Linearized, electronic temperature measurement with RTD or TC sensor.
- Conversion of linear resistance variation to a standard analog current / voltage signal, i.e. from solenoids and butterfly valves or linear movements with attached potentiometer.
- Power supply and signal isolator for 2-wire transmitters.
- Process control with 2 pairs of potential-free relay contacts and analog output.
- Galvanic separation of analog signals and measurement of floating signals.
- Suitable for the use in systems up to Performance Level “d” according to ISO-13849.

Technical characteristics

- When the UMU 100 is used in combination with the UMU-FD 2 display/ programming units, all operational parameters can be modified to suit any application. The deviceis designed with electronic hardware switches, it is not necesary to open the device for setting of DIP-switches.
- A green / red front LED indicates normal operation and malfunction. A yellow LED is ON for each active output relay.
- ontinuous check of vital stored data for safety reasons.
- 4-port 2.3 kVAC galvanic isolation.

promesstec GmbH I Niedersachsenstraße 4 I D- 48465 Schüttorf I Tel.:+49 (0)5923/ 90 229 0 I Fax:+49 (0)5923/ 90 229 29
E-Mail: office@promesstec.com I Internet: www.promesstec.com

7. Applications

Input signals:

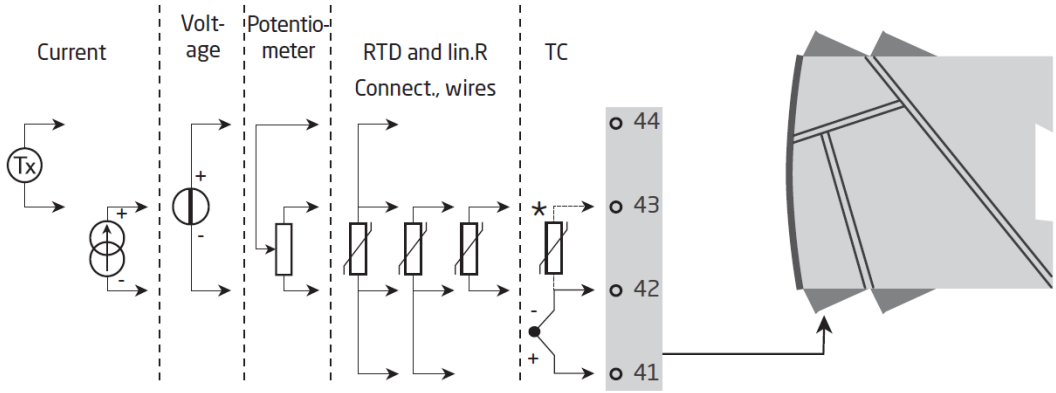

Order separately: CJC connector.
See the connection drawing on page 55.

Output signals:

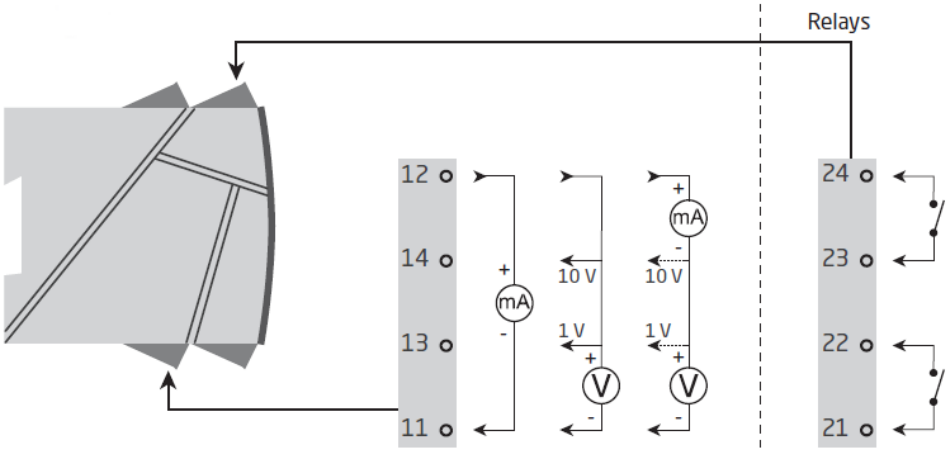

Analog, 0/4...20 mA and voltage

Supply:

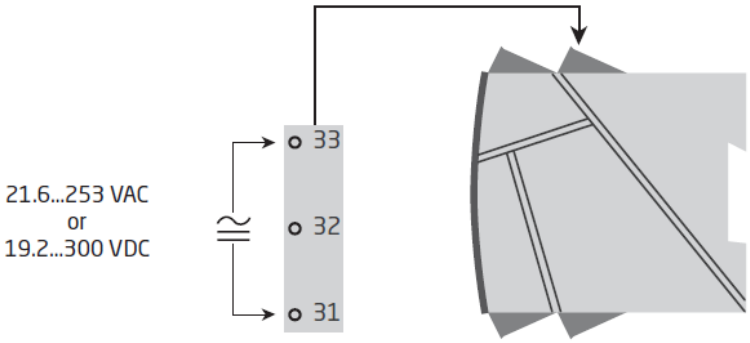

promesstec GmbH I Niedersachsenstraße 4 I D- 48465 Schüttorf I Tel.:+49 (0)5923/ 90 229 0 I Fax:+49 (0)5923/ 90 229 29
E-Mail: office@promesstec.com I Internet: www.promesstec.com

8. Front display / Programming front UMU-FD 2

Functionality

The simple and easily understandable menu structure and the explantory help text guide you effortlessly and automatically through the configuration steps, thus making the product very easy to use. Functions and configuration options are described in the section „Configuration / operating the function key“.

Application

- Communications Interface for modification of operational parameters UMU 100.
- Can be moved from one UMU 100 device to another and download the
- configuration of the first unit to subsequent units.
- Fixed display for readout of process data and status.

Technical characteristics

- LCD display with 4 lines:
  Line 1 (H = 5,57 mm) shows the input signal.
  Line 2 (H = 3,33 mm) shows the selected engineering unit.
  Line 3 (H = 3,33 mm) shows analog output or TAG no.
  Line 4 shows status for communication and relay.
- Programming access can be blocked by assigning a password. The password is saved in the device in order to ensure a high degree of protection against unauthorized modifications to the configuration.

promesstec GmbH I Niedersachsenstraße 4 I D- 48465 Schüttorf I Tel.:+49 (0)5923/ 90 229 0 I Fax:+49 (0)5923/ 90 229 29
E-Mail: office@promesstec.com I Internet: www.promesstec.com

9. Mounting / demounting the UMU-FD 2

1: Inserting the two fixing pins of the UMU-FD 2 into the openings on the upper front panel of the UMU 100.
2: Snap the UMU-FD 2 display into place at the bottom edge

Demounting of the UMU-FD 2
3/4: Press the release of the UMU-FD 2 on the underside and carefully remove the UMU-FD 2.

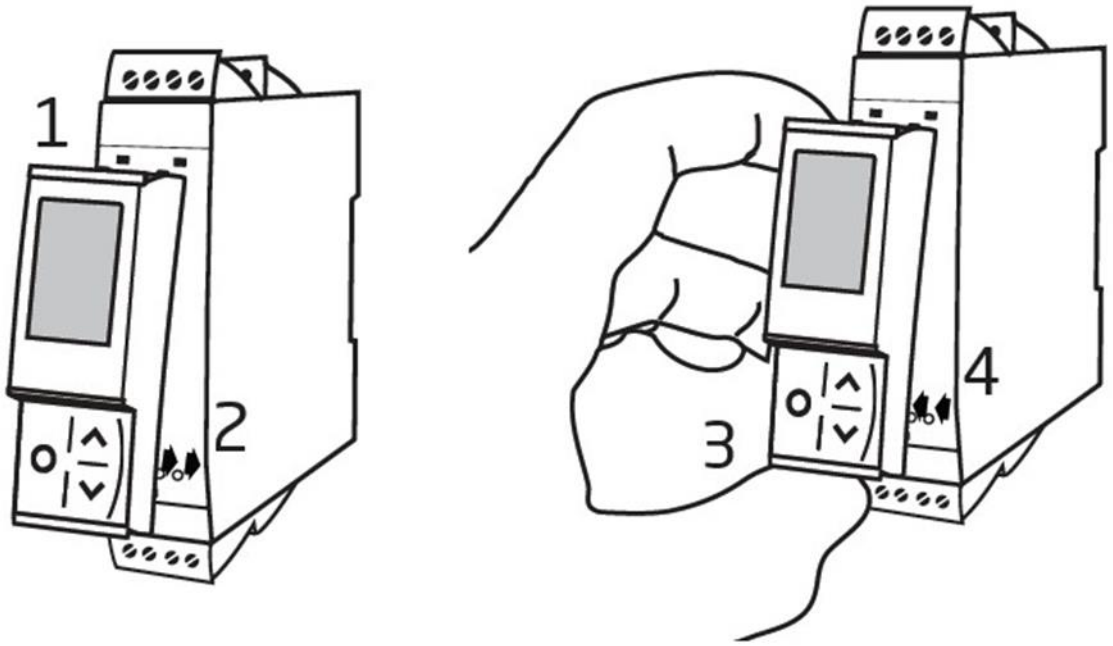

promesstec GmbH I Niedersachsenstraße 4 I D- 48465 Schüttorf I Tel.:+49 (0)5923/ 90 229 0 I Fax:+49 (0)5923/ 90 229 29
E-Mail: office@promesstec.com I Internet: www.promesstec.com

Order details

UMU 100 = Universal measuring transducer
UMU-FD 2 = Display- / Programming front
UMU-CJC = CJC-connector

10. Electrical specifications

Environmental conditions

Specification area . . . . . .-20°C to +60°C
Storage temperature. . . . . .-20°C to +85°C
Calibration temperature . . . . . .20...28°C
Relative humidity. . . . . < 95% RH (non cond.)
Protection degree. IP20
Installation in pollution degree 2 & measurement / overvoltage category II

Mechanical specifications

Dimensions (HxBxT) . . . . . 109 x 23,5 x 104 mm
Dimensions (HxBxT) with UMU-FD 2 . . . . . 109 x 23,5 x 116 / 131 mm
Weight, approx. . . . . .175 g
Weight with UMU-FD (approx.). . . . . 190 g / 205 g
DIN rail type . . . . . DIN EN 60715/35 mm
Cable cross section. . . . . 0,13...2,08 mm2 / AWG 26...14 stranded wire
Screw terminal torque . . . . . 0,5 Nm
Vibration . . . . . .IEC 60068-2-6
2...13,2 Hz . . . . . .±1 mm
13,2...100 Hz. . . . . .±0,7 g

Common electrical specifications

Supply voltage, universal . . . . . 21,6...253 VAC, 50...60 Hz or 19,2...300 VDC
Fuse . . . . . 400 mA SB / 250 VAC
Max. required power . . . . . ≤ 2,5 W
Max. power dissipation. . . . . ≤ 2,5 W
Isolation voltage, test . . . . . 2,3 kVAC
Isolation voltage, working . . . . . 250 VAC (reinforced) / 500 VAC (basic)
Programming . . . . . .UMU-FD
Signal dynamics, input / output . . . . . 24 Bit / 16 Bit
Signal- / noise ratio. . . . . .> 60 dB (0...100 kHz)
Response time (0...90%, 100...10%):
Temperature input . . . . . ≤ 1 s
mA- / V-input . . . . . ≤ 400 ms

Auxiliary supplies

2-wire-supply (terminal 44...43) . . . . . 25...16 VDC / 0...20 mA

promesstec GmbH I Niedersachsenstraße 4 I D- 48465 Schüttorf I Tel.:+49 (0)5923/ 90 229 0 I Fax:+49 (0)5923/ 90 229 29
E-Mail: office@promesstec.com I Internet: www.promesstec.com

Accuracy, the greater of general and basic values:

General values		
Input type	Absolute accuracy	Temperature coefficient
All	≤ ± 0,1% of span	≤ ±0,01% of span / °C

Basic values		
Type	Basic accuracy	Temperature coefficient
mA	≤ ± 4µA	≤ ± 0,4µA /°C
Volt	≤ ± 20µV	≤ ± 2µV /°C
Pt100	≤ ± 0,2°C	≤ ± 0,01°C /°C
Linear resistance	≤ ± 0,1Ω	≤ ± 0,01Ω /°C
Potentiometer	≤ ± 0,1Ω	≤ ± 0,01Ω /°C
TC type: E, J, K, L, N, T, U	≤ ± 1°C	≤ ± 0,05°C /°C
TC type: R, S, W3, W5, LR	≤ ± 2°C	≤ ± 0,2°C /°C
TC type: B 85…200°C	≤ ± 4°C	≤ ± 0,4°C /°C
TC type: B 200…1820°C	≤ ± 2°C	≤ ± 0,2°C /°C

EMC – Immunity Influence	< ± 0,5% pf span
Extended EMC Immunity:	
NAMUR E 21, A criterion, burst	< ±1% of span

Input specifications
RTD-, linear resistance- and potentiometer input
Input for RTD-types:
Pt10, Pt20, Pt50, Pt100, Pt200, PT250, Pt300, Pt400, Pt500, Pt1000
Ni50, Ni100, Ni120, Ni1000, Cu10, Cu20, Cu50, Cu100

Input type	Min. value	Max. value	Standard
Pt10…Pt1000	-200°C	+850°C	IEC 60751
Ni50…Ni1000	-60°C	+250°C	DIN 43760
Cu10…Cu100	-200°C	+260°C	α=0.00427
Lin.R	0Ω	10000Ω	-
Potetiometer	10Ω	100kΩ	-

Cable resistance per wire (max.), RTD. . . . . .50 Ω
Sensor current, RTD . . . . . Nom. 0,2 mA
Effect of sensor cable resistance (3- / 4-wire), RTD . . . . . .< 0,002 Ω / Ω
Sensor error detection, RTD . . . . . .Yes
Short ciruit detection, RTD. . . . . < 15 Ω

promesstec GmbH I Niedersachsenstraße 4 I D- 48465 Schüttorf I Tel.:+49 (0)5923/ 90 229 0 I Fax:+49 (0)5923/ 90 229 29
E-Mail: office@promesstec.com I Internet: www.promesstec.com

TE-input

Type	Min. value	Max. value	Standard
B	0°C	+1820°C	IEC 60584-1
E	-100°C	+1000°C	IEC 60584-1
J	-100°C	+1200°C	IEC 60584-1
K	-180°C	+1372°C	IEC 60584-1
L	-200°C	+900°C	DIN 43710
N	-180°C	+1300°C	IEC 60584-1
R	-50°C	+1760°C	IEC 60584-1
S	-50°C	+1760°C	IEC 60584-1
T	-200°C	+400°C	IEC 60584-1
U	-200°C	+600°C	DIN 43710
W3	0°C	+2300°C	ASTM E988-90
W5	0°C	+2300°C	ASTM E988-90
LR	-200°C	+800°C	GOST 3044-84

Cold Junction compensation (CJC):
via external sensor in connector CJC. . . . . 20...28°C ≤ ± 1°C
-20...20°C / 28...70°C ≤±2°C
via internal CJC-sensor. . . . . ±(2,0°C + 0,4°C * Δt)
Δt = internal temperature-ambient temperature
Sensor error detection, all TE-types . . . . . Yes
Sensor error current:
When detecting. . . . . .Nom. 2 µA
else. . . . . .0 µA

Current input
Measurement range. . . . . .0...23 mA
Programmable measurement ranges. . . . . .0...20 and 4...20 mA
Input resistance. . . . . Nom. 20 Ω + PTC 50 Ω
Sensor error detection:
Loop break 4...20 mA. . . . . .Yes

Voltage input
Measurement range. . . . . .0..12 VDC
Programmable measurement ranges. . . . . 0...1 / 0,2...1 / 0...5 / 1...5 / 0...10 and 2...10 VDC
Input resistance. . . . . Nom. 10 MΩ

promesstec GmbH I Niedersachsenstraße 4 I D- 48465 Schüttorf I Tel.:+49 (0)5923/ 90 229 0 I Fax:+49 (0)5923/ 90 229 29
E-Mail: office@promesstec.com I Internet: www.promesstec.com

Output specifications

Current output

Signal range (span) . . . . . .0...23 mA
Programmable signal ranges . . . . . 0...20 / 4...20 / 20...0 and 20...4 mA
Load (max.). . . . . ≤ 800 Ω
Load stability. . . . . ≤ 0,01% of span / 100 Ω
Sensor error detection . . . . . .0 / 3,5 / 23 mA / none
NAMUR NE 43 Up- / Downscale . . . . . .23 mA / 3,5 mA
Output limitation:
4...20 and 20...4 mA signals . . . . . .3,8...20,5 mA
0...20 and 20...0 mA signals . . . . . .0...20,5 mA
Current limit . . . . . .≤ 28 mA

Voltage output

Signal range . . . . . 0...10 VDC
Programmable signal ranges . . . . . 0...1 / 0,2...1 / 0...10 / 0...5 / 1...5 / 2...10 / 1...0 / 1...0,2 / 5...0 / 5...1 / 10...0 and 10...2 V
Load (min.) . . . . . 500 kΩ

of span = of the current selected measurement range

Relay outputs

Relay functions. . . . . .Setpoint, window, Senor error, Latch, Power, Off
Hysteresis . . . . . 0...100%
On- / Off-delay. . . . . 0...3600 s
Sensor error detection. . . . . Break / Make / Hold
Max. voltage . . . . . 250 VAC / VDC
Max. current. . . . . 2 A Max.
AC power . . . . . .500 VA
Max. DC current, resistive load:
@ ^{U}Relay ≤ 30 VDC. . . . . .2 ADC
@ ^{U}Relay >30 VDC . . . . . .[1380 x U^{-2}_{Relay} x $1{,}0085^{URelay}$] ADC

promesstec GmbH I Niedersachsenstraße 4 I D- 48465 Schüttorf I Tel.:+49 (0)5923/ 90 229 0 I Fax:+49 (0)5923/ 90 229 29
E-Mail: office@promesstec.com I Internet: www.promesstec.com

Graphic depiction of [1380 x U_{relay}^{-2} x $1.0085^{U_{relay}}$]:

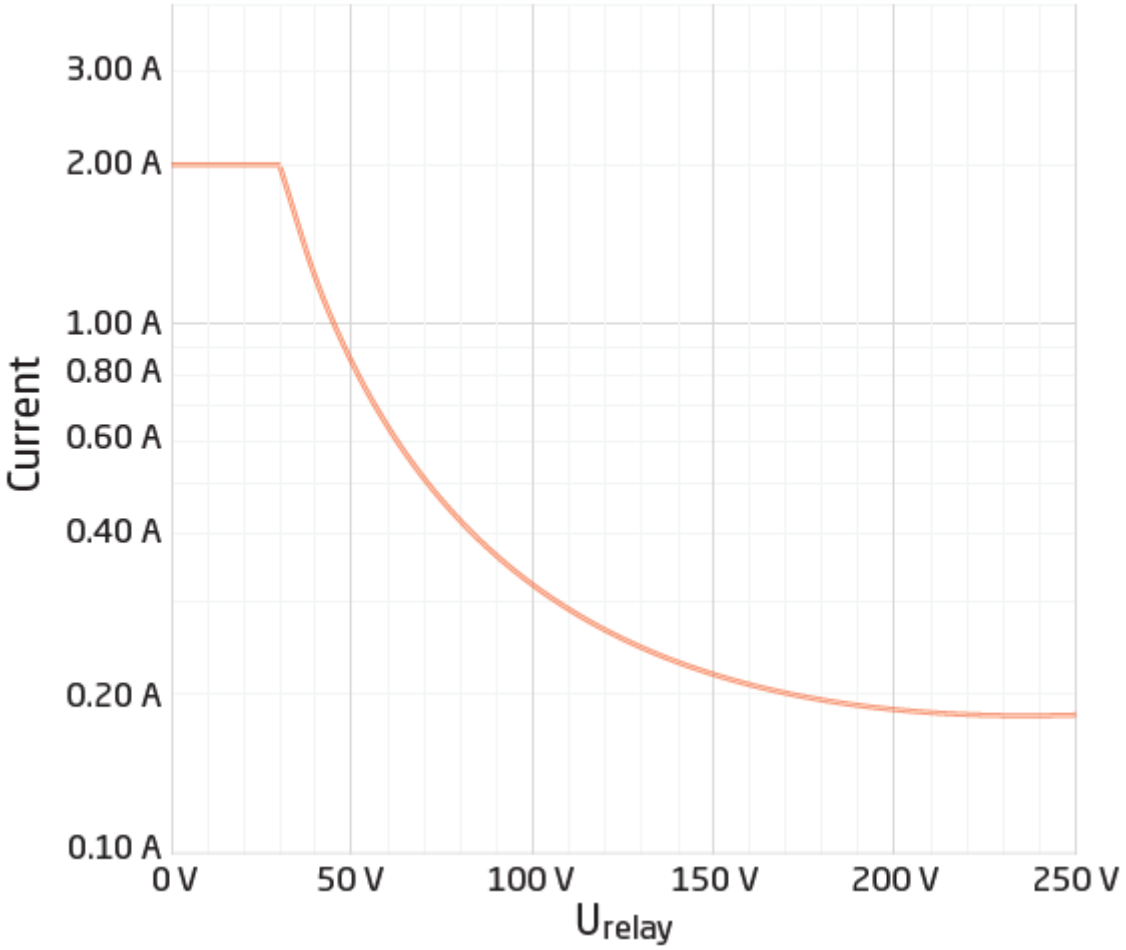

promesstec GmbH I Niedersachsenstraße 4 I D- 48465 Schüttorf I Tel.:+49 (0)5923/ 90 229 0 I Fax:+49 (0)5923/ 90 229 29
E-Mail: office@promesstec.com I Internet: www.promesstec.com

11. Visualisation in the UMU-FD

Sensor error detection and input signal outside range

Sensor error check:		
Device	Configuration	Sensor error detection:
UMU 100	R1, ERR.ACT=NONE - R2, ERR.ACT=NONE, OUT.ERR=NONE	OFF
	Else:	ON

Outside range readout (IN.LO, IN.HI): If the valid range of the A/D converter or the polynomial is exceeded			
Input	Range	Readout	Limit
VOLT	0…1 V / 0,2…1 V	IN.LO	< -25 mV
		IN.HI	> 1,2 V
	0…10 V / 2…10 V	IN.LO	< - 25 mV
		IN.HI	>12 V
CURR	0…20 mA / 4…20 mA	IN.LO	< -1,05mA
		IN.HI	>25,05 mA
LIN.R	0…800 Ω	IN.LO	< 0 Ω
		IN.HI	> 1075 Ω
	0…10 kΩ	IN.LO	< 0 Ω
		IN.HI	>110 kΩ
POTM	-	IN.LO	< -0,5 %
		IN.HI	>100,5 %
TEMP	TC /RTD	IN.LO	< temperature range -2°C
		IN.HI	> temperature range +2°C

Display redout below min. /above max. (-1999, 9999):			
Input	Range	Readout	Limit
All	All	-1999	Display readout <-1999
		9999	Display readout >9999

Sensor error detection limits

Sensor error detection (SE.BR, SE.SH)			
Input	Range	Readout	Limit
CURR	Loop break (4…20mA)	SE.BR	<=3,6 mA; >= 21 mA
POTM	All, SE.BR on all 3-wire	SE.BR	> ca. 126 kΩ
LIN.R	0…800Ω	SE.BR	> ca. 875 Ω
	0…10kΩ	SE.BR	> ca. 11 kΩ
TEMP	TC	SE.BR	> ca. 750 kΩ / (1.25V)
	RTD, 2-, 3-, and 4-wire NoSE.SH for Cuxx, Pt10, Pt20 and Pt50	SE.BR	> ca. 15 kΩ
		SE.SH	< ca. 15 Ω

promesstec GmbH I Niedersachsenstraße 4 I D- 48465 Schüttorf I Tel.:+49 (0)5923/ 90 229 0 I Fax:+49 (0)5923/ 90 229 29
E-Mail: office@promesstec.com I Internet: www.promesstec.com

Error indications

Readout at hardware error		
Error search	Readout	Cause
Test of internal CJC sensor	CJ.ER	CJC sensor defect or temperature outside range
Checksum test of the configuration in FLASH	FL.CO	Error in FLASH
Check measurement of analog output current	AO.ER	1) No load on the current output (only S4…20 / S20…4 mA)
Communications test UMU-FD / UMU 100	NO.CO	Connection error
Check that Input signal matches Input configuration	IN.ER	1) Error levels on Input
Check that saved configuration in UMU 100 matches device	TY.ER	Configuration is not UMU 100

!	All error indications in the display flash once per second. The help text explains the error. If the error is a sensor error, the display flahes as well – this is acknowledged (stopped) by pushing the OK button.
1)	The error is reset by switching off and then switching on the supply voltage to the device.

promesstec GmbH I Niedersachsenstraße 4 I D- 48465 Schüttorf I Tel.:+49 (0)5923/ 90 229 0 I Fax:+49 (0)5923/ 90 229 29
E-Mail: office@promesstec.com I Internet: www.promesstec.com

12. Connections

Supply:

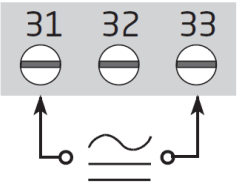

Inputs:

RTD, 2-wire

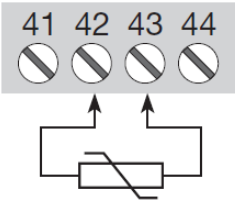

RTD, 3- / 4-wire

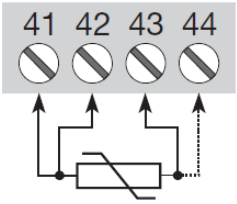

TC, internal CJC sensor

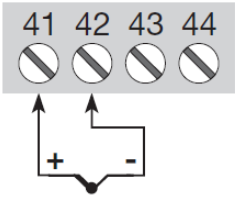

Resistance, 2-wire

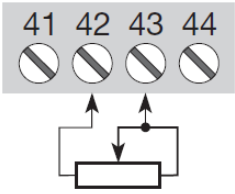

Resistance, 3- / 4-wire

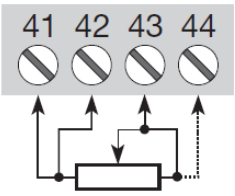

Potentiometer

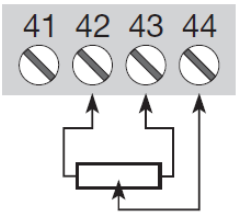

2-wire transmitter

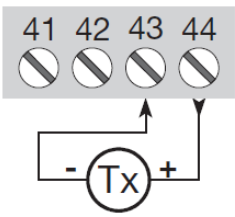

Current

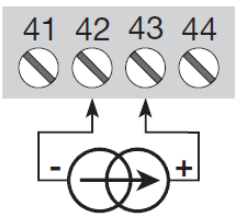

Voltage

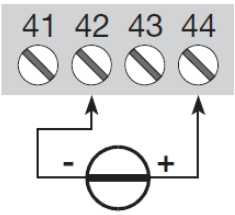

*TC, CJC connector

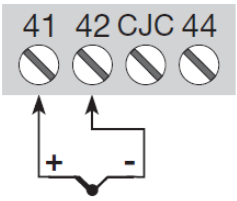

* Order separately: CJC connector

Outputs:

Current

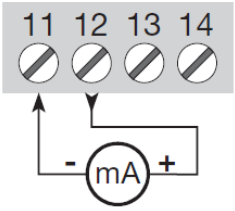

Voltage, 1 V

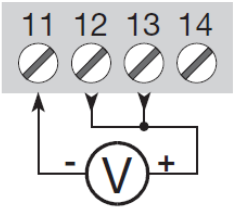

Voltage, 10 V

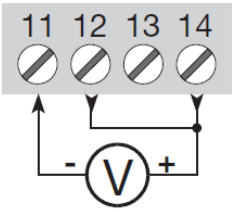

Relays

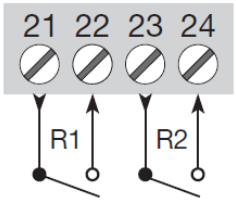

promesstec GmbH I Niedersachsenstraße 4 I D- 48465 Schüttorf I Tel.:+49 (0)5923/ 90 229 0 I Fax:+49 (0)5923/ 90 229 29
E-Mail: office@promesstec.com I Internet: www.promesstec.com

13. Block diagram

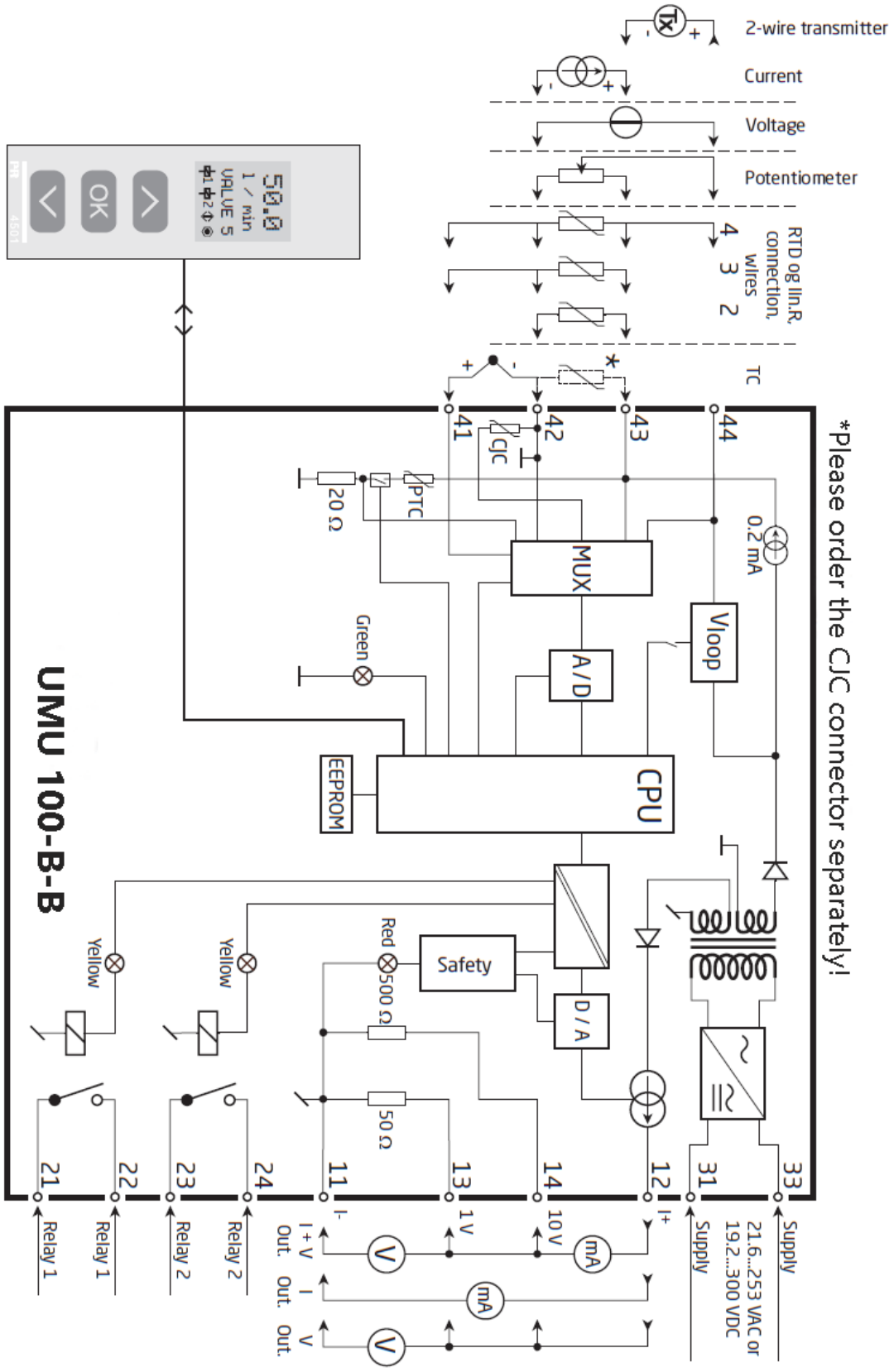

promesstec GmbH I Niedersachsenstraße 4 I D- 48465 Schüttorf I Tel.:+49 (0)5923/ 90 229 0 I Fax:+49 (0)5923/ 90 229 29
E-Mail: office@promesstec.com I Internet: www.promesstec.com

14. Configuration / operating the function keys

14.1 Documentation for routing diagram

General

When configuring the UMU 100, you will be guided through all parameters and you can choose the setting which fit the application. For each menu there is a scrolling help text which is automatically shown in line 3 on the display.

Configuration is carried out by use of the 3 function keys:

- ⌃ Will increase the numerical value or choose the next parameter
- ⌄ Will decrease the numerical value or choose the previous parameter
- OK Will save the chosen value and proceed to the next menu

When configuration is completed, the display return to the default state 1.0. Pressing and holding OK will return to the previous neu or return to the default state (1.0) without saving the changed values or parameters.

If no key is activated for 1 minute, the display will return to the default state (1.0) without saving the changed values or parameters.

14.2 Further explanations

Fast setpoint adjustment and relay test: These menu allows you to make a quick setpoint change and relay test when the FastSet menu is activated. This function can only be activated when the relay are set for setpoint function and are controlled by a setpoint.
Pressing ⌃ and ⌄ simultaneously will activate a relay test and change the state of the relay.
Pressing OK will save the setpoint change.
Holding down OK for more than 1 second will return the unit to the default state without saving the setpoint change.

Password protection: Programming access can be blocked by assigning a password. The password is saved in the device in order to ensure a high degree of protection against unauthorized modifications to the configuration. If the configured password is not known, please contact **promesstec GmbH.**

promesstec GmbH I Niedersachsenstraße 4 I D- 48465 Schüttorf I Tel.:+49 (0)5923/ 90 229 0 I Fax:+49 (0)5923/ 90 229 29
E-Mail: office@promesstec.com I Internet: www.promesstec.com

14.3 Signal- and sensor error info via display front UMU-FD 2

Sensor error (see limits in the table) is displayed as SE.BR (sensor break) or SE.SH (sensor short). Signals outside the selected range (not sensor error, see table for limits) are displayed as IN.LO indicating low input signal or IN.HI indicating high input signal. The error indication is displayed in line 3 as text and at the same time the backlight flashes. Line 4 of the display is a status line which displays status of relay 1 and relay 2, COM (flashing bullet) indicating correct functioning of UMU-FD and arrow up/down which indicates tendency readout of the input signal. If the figure 1 or figure 2 flashes, the unit has detected that the setpoint has been exceeded and that the
relay is in “delay” mode. When the delay time has passed and the relay makes / breakes, the relay sign either displays or disappears.

14.4 Signal- and Sensor error indication without display front

Status of the unit can also be read from the red / green LED in the front of the device.

Green flashing LED 13 Hz indicates normal operation.
Green flashing LED 1 Hz indicates sensor error.
Steady red LED indicates internal error.

14.5 Relay functions

6 different settings of relay function can be selected.

Setpoint:	The unit works as a single limit switch.
Window:	The relay has a window that is defined by a high setpoint. On both sides of the window the relay has the same status.
Error function:	The relay is activated by sensor error.
Power:	The relay is activated as long as the power is on.
OFF:	The relay is deactivated.
Latch:	The relay is latched. Only valid for setpoint and window function.

Increasing/decreasing: The relay can be set to activate at increasing or decreasing Input signal.

Delay: An ON and an OFF delay can be set on both relay s in the range 0…3600 s.

Hysteresis: 0,0...100,0%.

promesstec GmbH I Niedersachsenstraße 4 I D- 48465 Schüttorf I Tel.:+49 (0)5923/ 90 229 0 I Fax:+49 (0)5923/ 90 229 29
E-Mail: office@promesstec.com I Internet: www.promesstec.com

14.6 Latch

When the setpoint is exceeded the relay outputs enters an alarm state. The latch function of the UMU 100 will hold the relay in this state until the function is deactivated manually. The latch function can be applied when the relay function setpoint or window is selected.

The latch function can be selected separately for each relay output. If the configuration is copied from one UMU 100 to another by way of the UMU-FD 2, the latch function must be reconfigured.

The latch function is activates and holds the relays when the input signal rises above or falls below the selected setpoints and the relay action has been selected as increasing or decreasing.

The window function is selected by choosing „window“ in the menu and defining a high and a low setpoint.

It can be selected for each relay contact whether the contact is open or closed inside the window. This selection is made on the menu R1.cont and R2.cont.

The setpoint function is selected by choosing „setpoint“ in the menu and entering the desired limit. The device then works as a single limit switch.

An activated relay means that the contact is closed if the contact function „normally open“ is selected, and the contact is open if the contact function „normally closed“ is selected.

The delay time for activation and deactivation can be set independently of each other in the menus ON.DEL and OFF.DEL respectively.

If the relay function „Error“ is active, the relay will latch when a sensor error occurs and will not be deactivated automatically when the sensor error is rectified.

The relay can only be deactivated by an operator and only when the normal conditions for deactivation are met. If the input signal still has a value that will activate the relay, the relay will latch again.

See the graphic depiction of the setpoint and window functions on page 70 and 71.

14.7 Manuel deactivation of the latch function

If the relay outputs are activated and there by latched, it will be indicated in the display. The backlight flashes and the scrolling help text tells you how to deactivate the output. Manual deactivation is carried out by way of the front buttons on the UMU-FD. Use ⌃ and ⌄ to navigate in the menu and OK, to validate your selection.

promesstec GmbH I Niedersachsenstraße 4 I D- 48465 Schüttorf I Tel.:+49 (0)5923/ 90 229 0 I Fax:+49 (0)5923/ 90 229 29
E-Mail: office@promesstec.com I Internet: www.promesstec.com

If the password protection has been activated, the password must be entered in order to access the deactivation menu. See the menu structure on page 67.

14.8 Advanced function

The unit gives access to number of advanced functions which can be reached by answering “YES“ to the point „ADV.SET“.

Memory (MEM): In the memory menu you can save the configuration of the device in the UMU-FD, and then move the UMU-FD onto another device of the same type and download the configuration in the new device.

Display setup (DISP): Here you can adjust the brightness contrast and the backlight. Setup of TAG numbers with 6 alphanumerics. Selection of functional readout in the line of the display – choosen between readout of analog output or tag no.

Two-point process calibration (CAL): The device can be process-calibrated in 2 points to fit a given Input signal. A low input signal (not necessarily 0%) is applied and the actual value is entered via UMU-FD. Then a high (not necessarily 100%) is applied and the actual value is entered via UMU-FD. If you accept to use the calibration, the device will work according to this new adjustment. If you later reject this menu point or choose another type of input signal the device will return to factory calibration.

Process simulation function (SIM): In the menu point “EN.SIM” it is possible to simulate an Input signal by means of the arrow keys and thus control the output signal up or down. If you confirm with OK, the device jumps back to normal mode. The following point allows you to activate relay 1 and 2 by means of the arrow-keys up/down. You must exit the menu by pressing OK (no time-out). The simulation function exits automatically, if the UMU-FD is detached.

Password (PASS): Here you can choose a password between 0000 and 9999 in order to protect the unit against unauthorized modifications to the configuration. The unit is delivered default without password.

Language (LANG): In the menu ”lang.setup” you can choose between 7 different language versions of help texts that will appear in the menu. You can choose between: UK, DE, FR, IT, ES, SE and DK.

Auto diagnosis
The device performs an advanced auto diagnosis of the internal circuits.
The following possible errors can by displayed in the front unit UMU-FD 2.

CJ.ER	-	CJC-sensor defect or temperature outside range
FL.ER	-	Flash error
AO.ER	-	No lead on the current output (only for S4...20 mA / S20...4 mA)
NO.CO	-	Connection error
IN.ER	-	Error levels on input
TY.ER	-	Configuration in UMU-FD does not match this product type

promesstec GmbH I Niedersachsenstraße 4 I D- 48465 Schüttorf I Tel.:+49 (0)5923/ 90 229 0 I Fax:+49 (0)5923/ 90 229 29
E-Mail: office@promesstec.com I Internet: www.promesstec.com

Selection of units
After choosing the Input signal type you can choose which process units should be displayed in text line 2 (see table). By selection of temperature Input the process value is always displayed in °C or °F. This is selected in the menu point after selection of temperature input.

CJC
In the CJC-menu you can choose between CJC connector and internal cold junction compensation. The CJC connector (UMU-CJC) must be ordered separately.

promesstec GmbH I Niedersachsenstraße 4 I D- 48465 Schüttorf I Tel.:+49 (0)5923/ 90 229 0 I Fax:+49 (0)5923/ 90 229 29
E-Mail: office@promesstec.com I Internet: www.promesstec.com

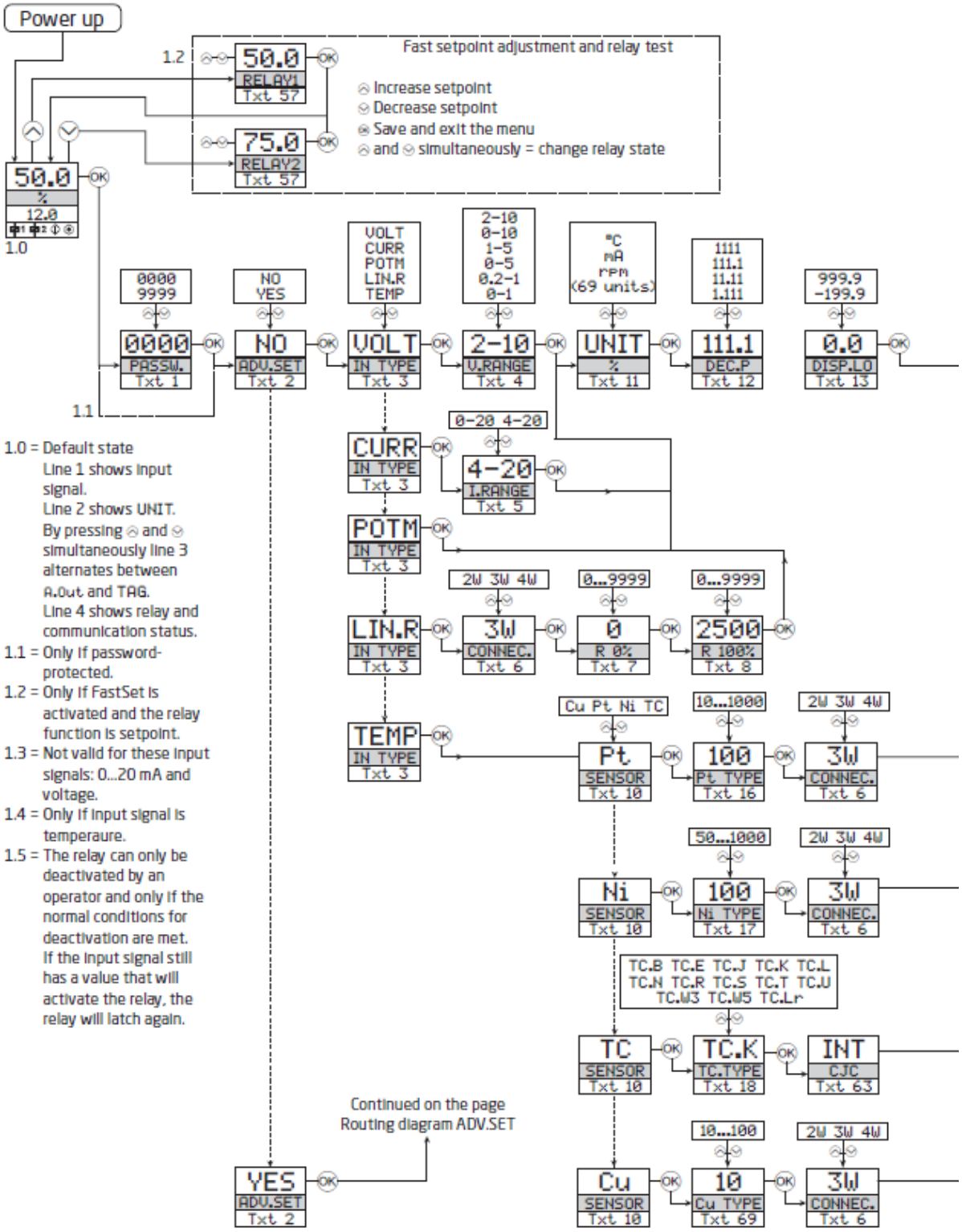

1.0 = Default state
Line 1 shows input signal.
Line 2 shows UNIT.
By pressing ⌃ and ⌄ simultaneously line 3 alternates between A.Out and TAG.
Line 4 shows relay and communication status.

1.1 = Only if password-protected.

1.2 = Only if FastSet is activated and the relay function is setpoint.

1.3 = Not valid for these input signals: 0...20 mA and voltage.

1.4 = Only if input signal is temperaure.

1.5 = The relay can only be deactivated by an operator and only if the normal conditions for deactivation are met. If the input signal still has a value that will activate the relay, the relay will latch again.

promesstec GmbH I Niedersachsenstraße 4 I D- 48465 Schüttorf I Tel.:+49 (0)5923/ 90 229 0 I Fax:+49 (0)5923/ 90 229 29
E-Mail: office@promesstec.com I Internet: www.promesstec.com

15. Routing diagram

If no key is activated for 1 minute, the display will return to the default state 1.0 without saving configuration changes.
Increase value / choose next parameter
Decrease value / choose previous parameter
Save the chosen value and proceed to the next menu
Hold Back to previous menu / return to menu 1.0 without saving.

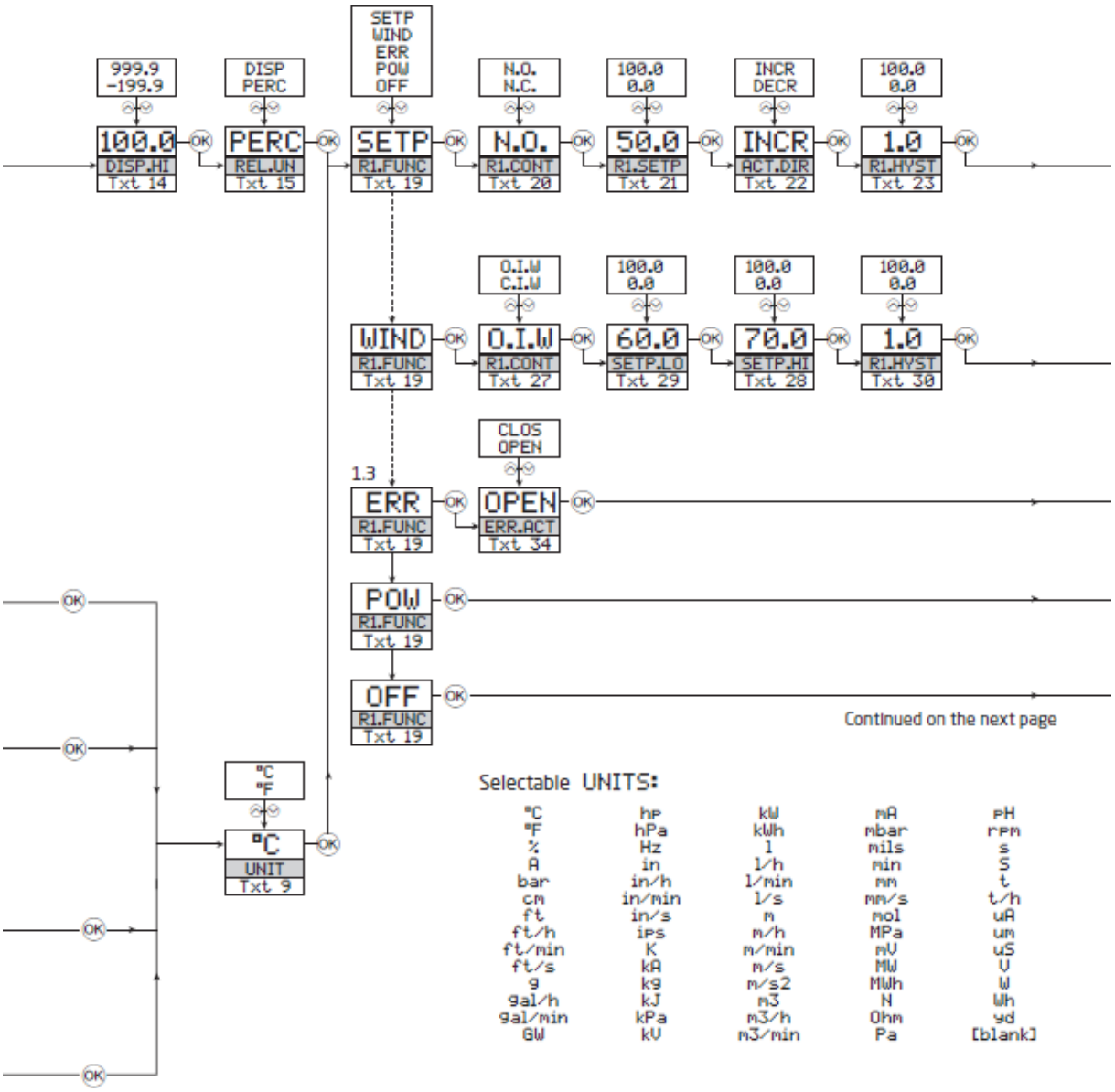

promesstec GmbH I Niedersachsenstraße 4 I D- 48465 Schüttorf I Tel.:+49 (0)5923/ 90 229 0 I Fax:+49 (0)5923/ 90 229 29
E-Mail: office@promesstec.com I Internet: www.promesstec.com

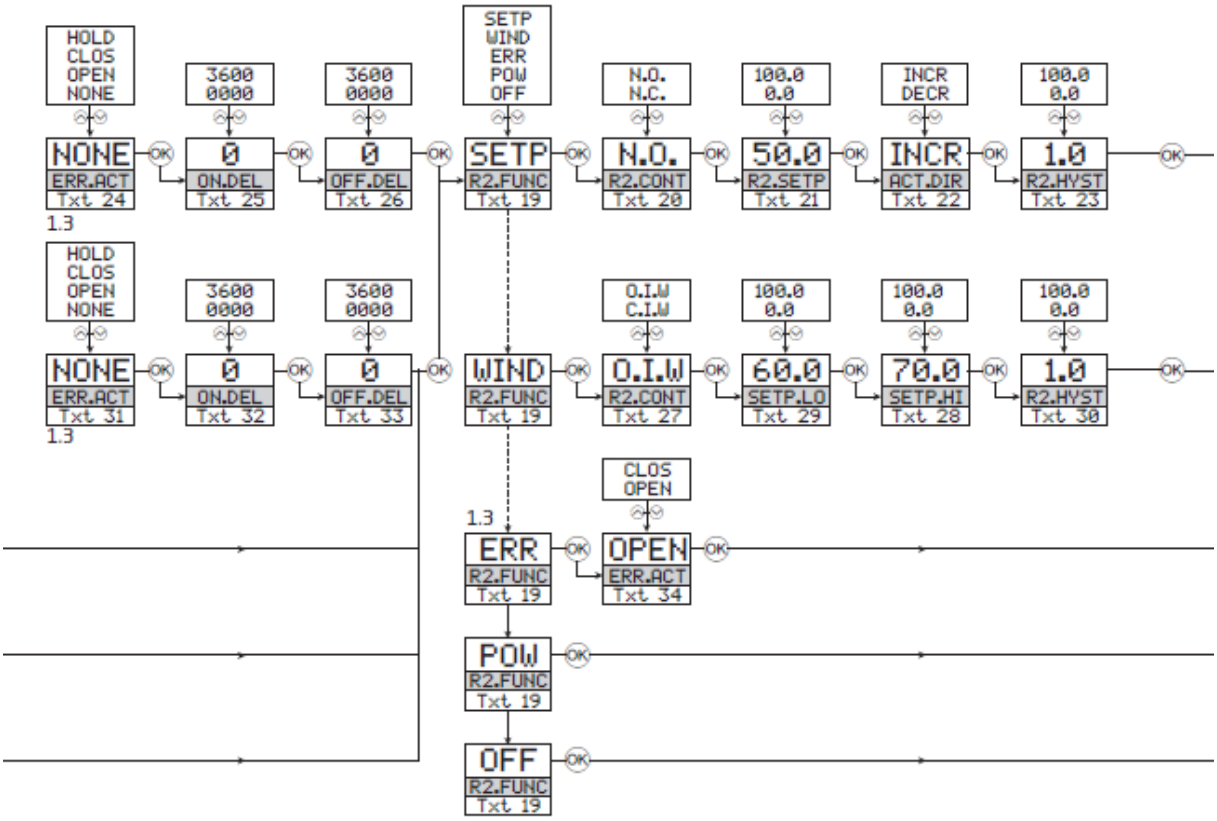

promesstec GmbH I Niedersachsenstraße 4 I D- 48465 Schüttorf I Tel.:+49 (0)5923/ 90 229 0 I Fax:+49 (0)5923/ 90 229 29
E-Mail: office@promesstec.com I Internet: www.promesstec.com

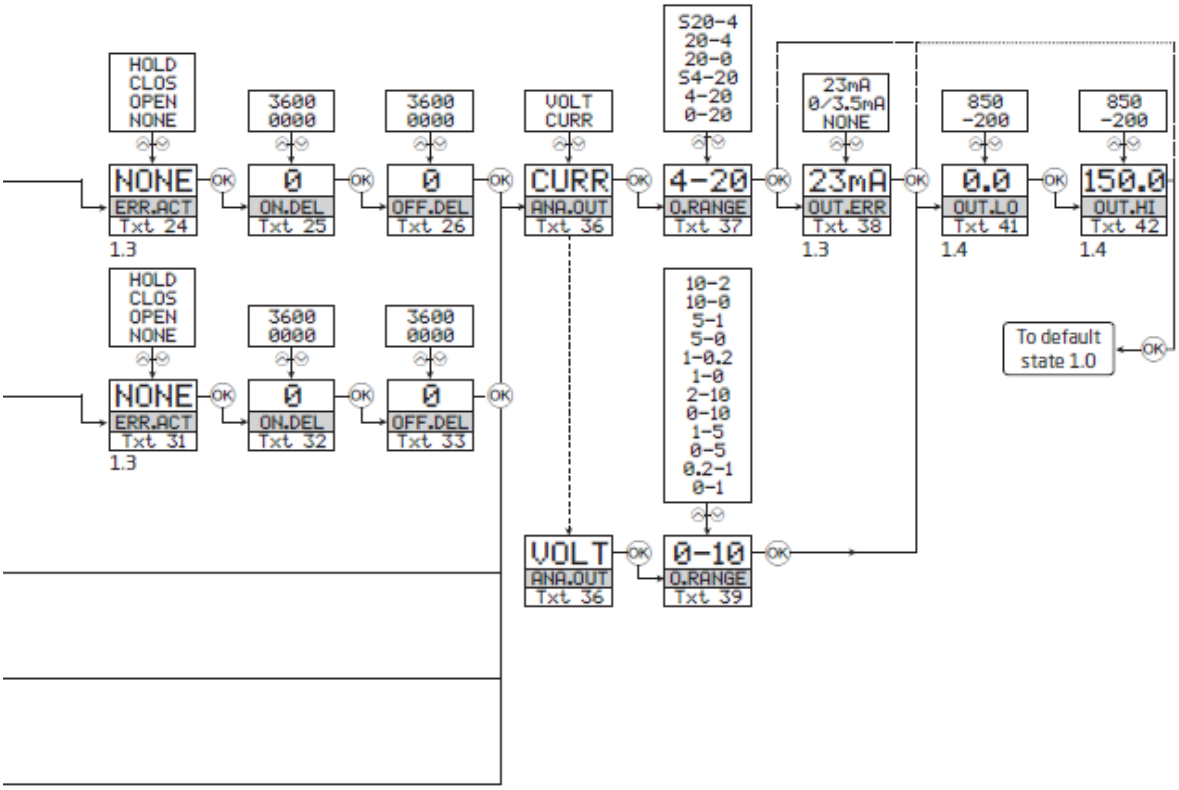

promesstec GmbH I Niedersachsenstraße 4 I D- 48465 Schüttorf I Tel.:+49 (0)5923/ 90 229 0 I Fax:+49 (0)5923/ 90 229 29
E-Mail: office@promesstec.com I Internet: www.promesstec.com

15.1 Routing diagram, advanced settings (ADV.SET)

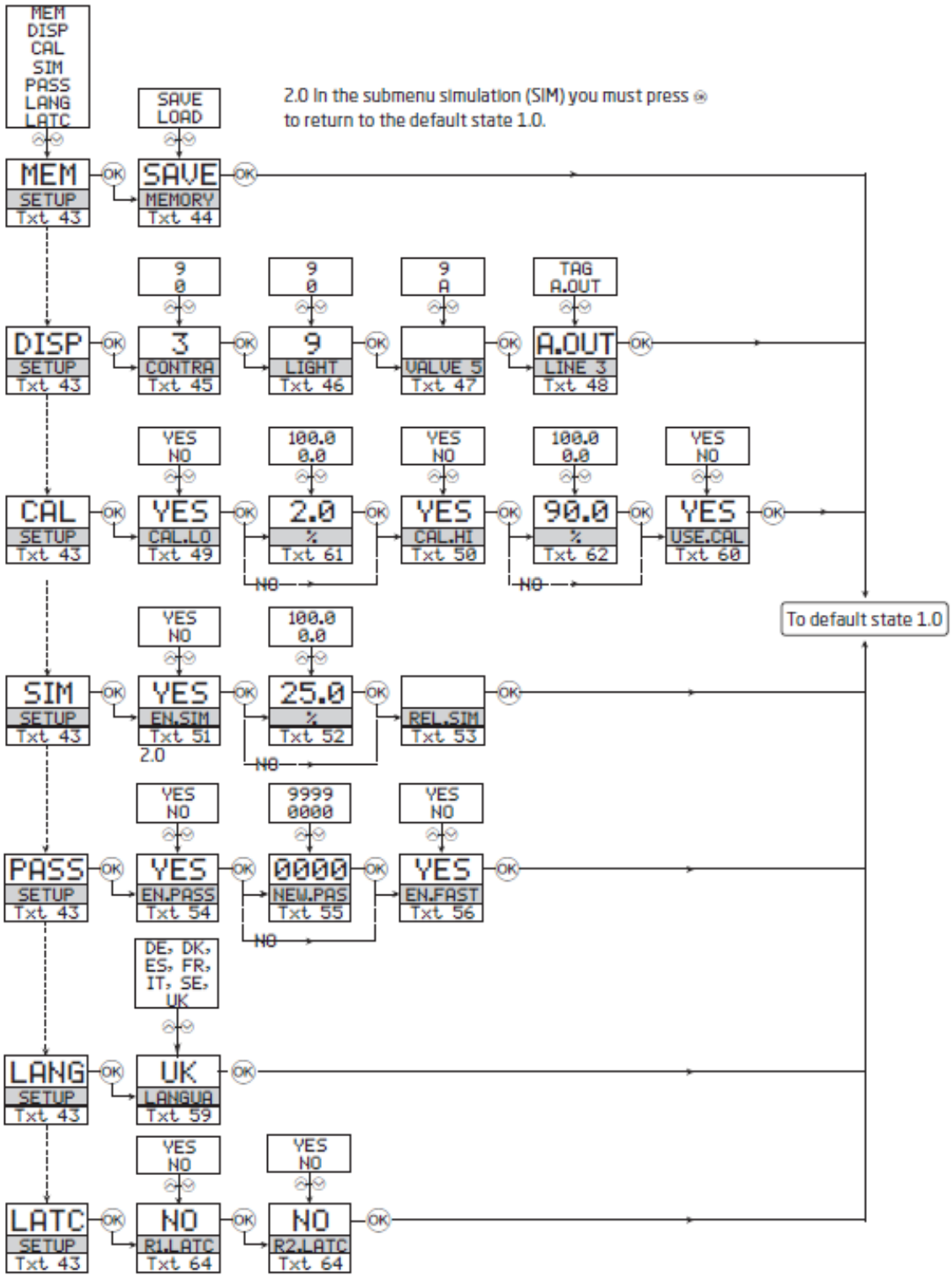

promesstec GmbH I Niedersachsenstraße 4 I D- 48465 Schüttorf I Tel.:+49 (0)5923/ 90 229 0 I Fax:+49 (0)5923/ 90 229 29
E-Mail: office@promesstec.com I Internet: www.promesstec.com

15.2 Routing diagram, manual deactivation of the latch function

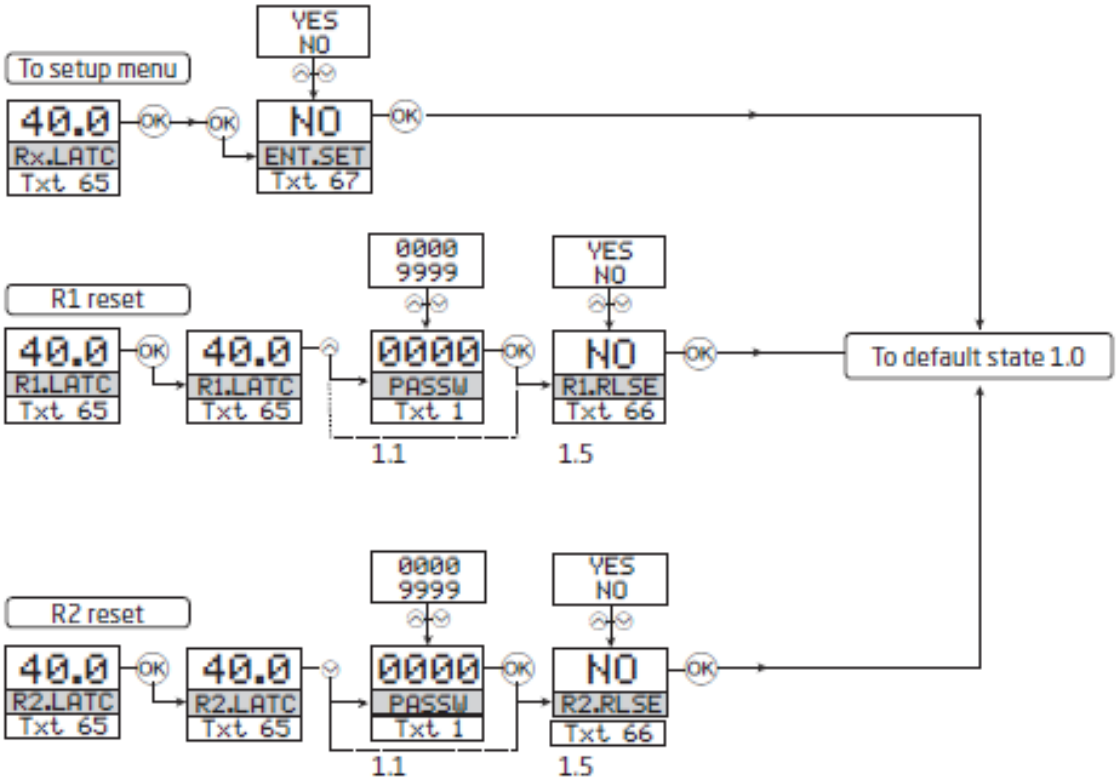

promesstec GmbH I Niedersachsenstraße 4 I D- 48465 Schüttorf I Tel.:+49 (0)5923/ 90 229 0 I Fax:+49 (0)5923/ 90 229 29
E-Mail: office@promesstec.com I Internet: www.promesstec.com

16. Help text overview

[01] Set correct password
[02] Enter advanced setup menu?
[03] Select temperature input
Select potentiometer input
Select linear resistance input
Select current input
Select voltage input
[04] Select 0.0-1 V input range
Select 0,2-1 V input range
Select 0-5 V input range
Select 1-5 V input range
Select 0-10 V input range
Select 2-10 V input rage
[05] Select 0-20 mA input range
Select 4-20 mA input range
[06] Select 2-wire sensor connection
Select 3-wire sensor connection
Select 4-wire sensor connection
[07] Set resistance value low
[08] Set resistance value high
[09] Select Celsius as temperature unit
Select Fahrenheit as temperature unit
[10] Select TC sensor Typ
Select Ni sensor Typ
Select Pt sensor Typ
Select Cu sensor Typ
[11] Select display unit
[12] Select decimal point position
[13] Set display range low
[14] Set display range high
[15] Set relays in % of input range
Set relays in display units
[16] Select Pt10 as sensor type
Select Pt20 as sensor type
Select Pt50 as sensor type
Select Pt100 as sensor type
Select Pt200 as sensor type
Select Pt250 as sensor type
Select Pt300 as sensor type
Select Pt400 as sensor type
Select Pt500 as sensor type
Select Pt1000 as sensor type
[17] Select Ni50 as sensor type
Select Ni100 as sensor type
Select Ni120 as sensor type
Select Ni1000 as sensor type
[69] Select Cu10 as sensor type
Select Cu20 as sensor type
Select Cu50 as sensor type
Select Cu100 as sensor type
[18] Select TC-B as sensor type
Select TC-E as sensor type
Select TC-J as sensor type
Select TC-K as sensor type
Select TC-L as sensor type
Select TC-N as sensor type
Select TC-R as sensor type
Select TC-S as sensor type
Select TC-T as sensor type
Select TC-U as sensor type
Select TC-W3 as sensor type
Select TC-W5 as sensor type
Select TC-Lr as sensor type
[19] Select OFF function – relay is permanently off
Select POWER function - relay indicates power status OK
Select ERROR function - relay indicates sesor error only
Select WINDOW function - relay controlled by 2 setpoints
Select SETPOINT function – relay controlled by 1 setpoint
[20] Select Normally Closed contact
Select Normally Open contact
[21] Set relay setpoint
[22] Activate relay on decreasing signal
Activate relay on increasing signal
[23] Set relay hysteresis
[24] No error action – undefined status at error
Open relay contact at error
Close relay contact at error
Hold relay status at error
[25] Set relay ON delay in seconds
[26] Set relay OFF delay in seconds
[27] Relay contact is Closed Inside Window
Relay contact is Open Inside Window
[28] Set relay window setpoint high
[29] Set relay window setpoint low
[30] Set relay window hysteresis
[31] No error action – undefined status at error
Open relay contact at error
Close relay contact at error
Hold relay status at error
[32] Set relay ON delay in seconds
[33] Set relay OFF delay in seconds
[34] Open relay contact at error
Close relay contact at error
[36] Select current as analog output type
Select voltage as analog output type
[37] Select 0-20 mA output range
Select 4-20 mA output range
Select 4-20 mA with safety readback
Select 20-0 mA output range
Select 20-4 mA output range
Select 20-4 mA with safety readback
[38] Select no error action – output undefined at error
Select Downscale at error
Select NAMUR NE43 Downscale at error
Select NAMUR NE43 Upscale at error
Select 0.0-1 V output range
[39] Select 0,2-1 V output range
Select 0-5 V output range
Select 1-5 V output range
Select 0-10 V output range
Select 2-10 V output range
Select 1-0,0 V output range
Select 1-0,2 V output range
Select 5-0 V output range
Select 5-1 V output range
Select 10-0 V output range
Select 10-2 V output range
Set temperature for analog output LOW
[41] Set tempertature for analog output HIGH
[42] Enter password setup
[43] Enter simulatio mode
Perform process calibration
Enter display setup
Perform memory operations
Enter relay latch setup

promesstec GmbH I Niedersachsenstraße 4 I D- 48465 Schüttorf I Tel.:+49 (0)5923/ 90 229 0 I Fax:+49 (0)5923/ 90 229 29
E-Mail: office@promesstec.com I Internet: www.promesstec.com

[44] Load saved configuration into UMU 100
Save UMU 100 configuration in UMU-FD
[45] Adjust LCD contrast
[46] Adjust LCD backlight
[47] Write a 6-character device TAG
[48] Analog output value is shown in display line 3
Device TAG is shown in display line 3
[49] Calibrate Input low to process value?
[50] Calibrate Input high to process value?
[51] Enable simulation mode?
[52] Set the input simulation value
[53] Relay simulation - use ⌃ and ⌄ to toggle relay 1 and 2
[54] Enable password protection?
[55] Set new password
[56] Enable Fastset functionality?
[57] Relay setpoint - press OK to save
[58] Relay setpoint – Read only
[59] Select language
[60] Use process calibration values?
[61] Set value for low calibration point
[62] Set value for high calibration point
[63] Select CJC-connector (accessory)
Select internal temperature sensor
[64] Enable relay latch function?
[65] Relay is latched – press OK to acknowledge
Relay 1 is latched – press ⌃ to release
Relay 2 is latched - press ⌄ to release
Relays are latched – press ⌃ or ⌄ to release relay 1 or 2
[66] Release relay? (if conditions allow)
[67] Enter setup menu? (latched relays may release!)

promesstec GmbH I Niedersachsenstraße 4 I D- 48465 Schüttorf I Tel.:+49 (0)5923/ 90 229 0 I Fax:+49 (0)5923/ 90 229 29
E-Mail: office@promesstec.com I Internet: www.promesstec.com

17. Grapic depiction

17.1 Grapic depiction of latch function setpoint

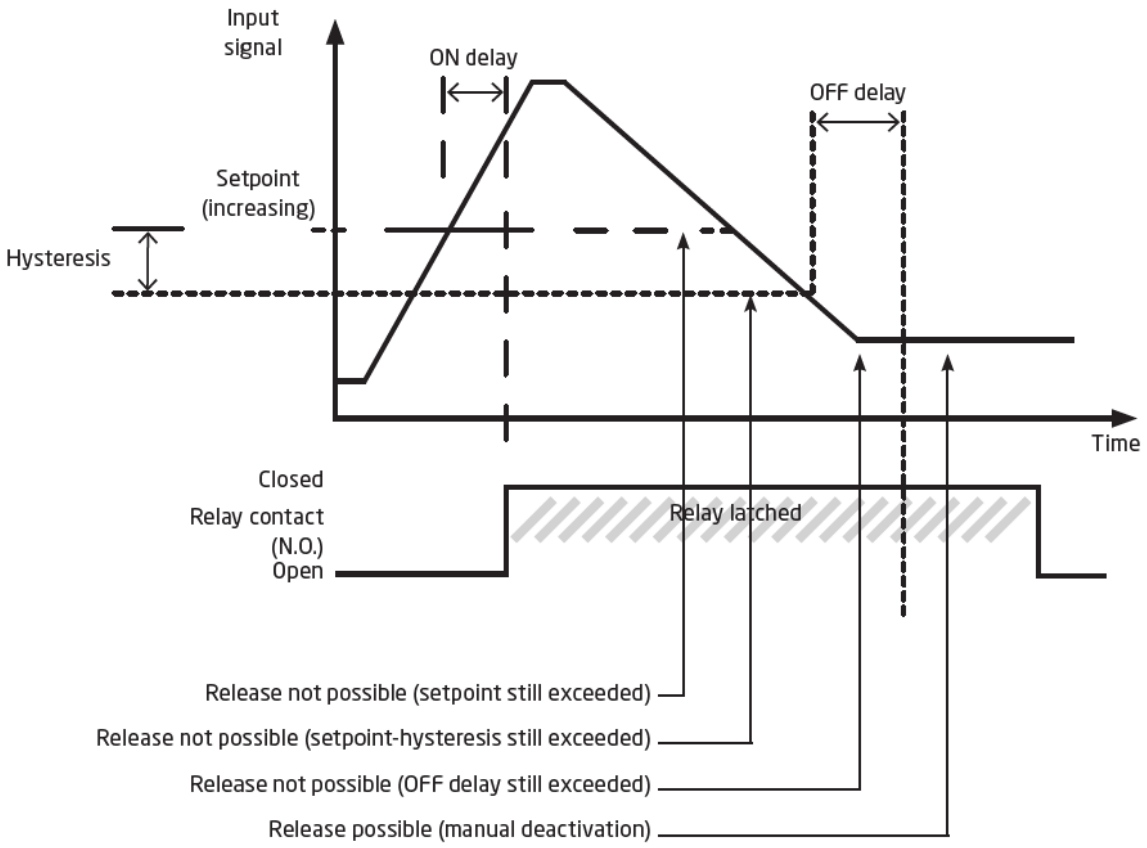

promesstec GmbH I Niedersachsenstraße 4 I D- 48465 Schüttorf I Tel.:+49 (0)5923/ 90 229 0 I Fax:+49 (0)5923/ 90 229 29
E-Mail: office@promesstec.com I Internet: www.promesstec.com

17.2 Graphic depiction of latch function window

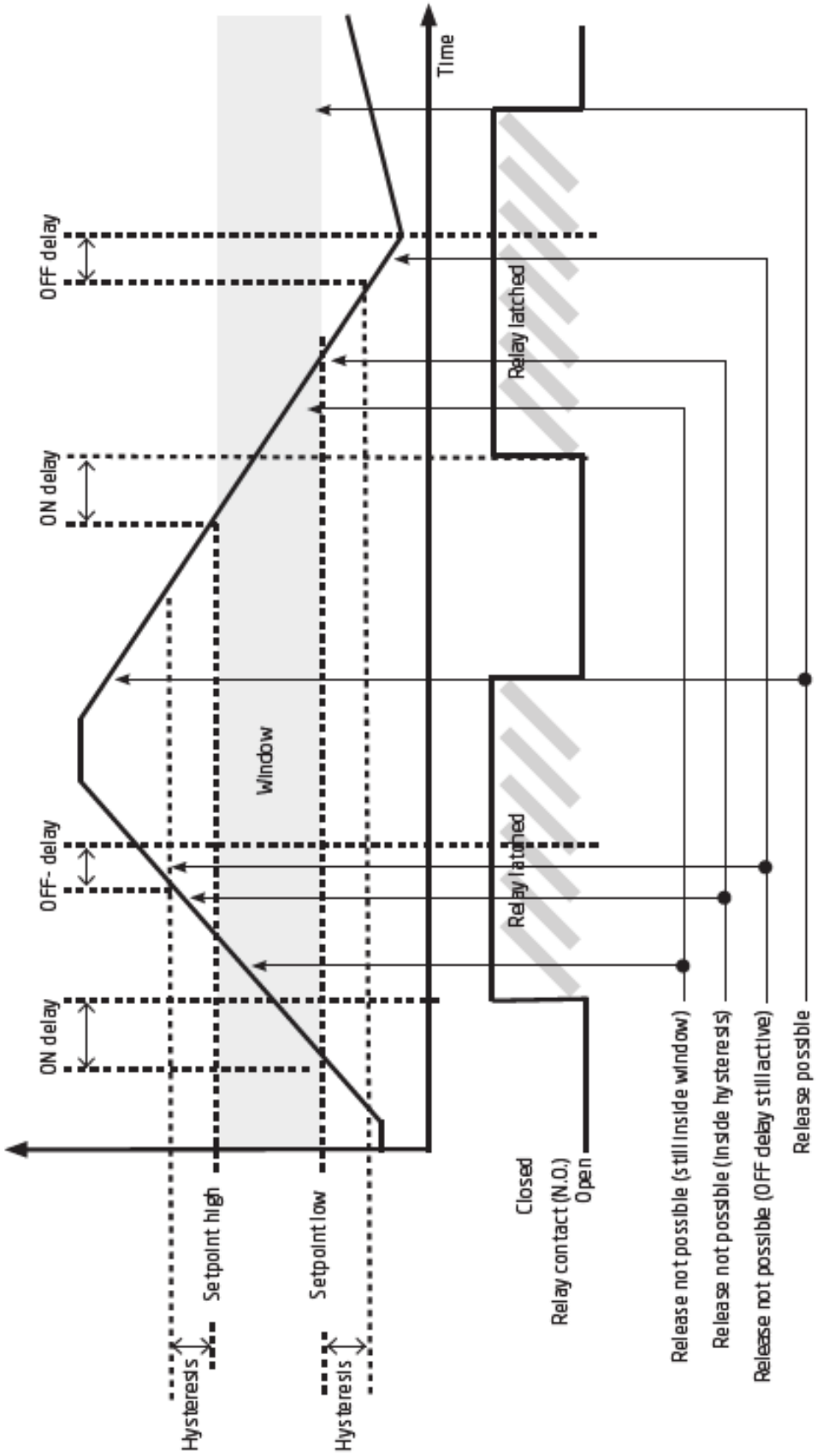

promesstec GmbH I Niedersachsenstraße 4 I D- 48465 Schüttorf I Tel.:+49 (0)5923/ 90 229 0 I Fax:+49 (0)5923/ 90 229 29
E-Mail: office@promesstec.com I Internet: www.promesstec.com

17.3 Graphic depiction of rely action setpoint

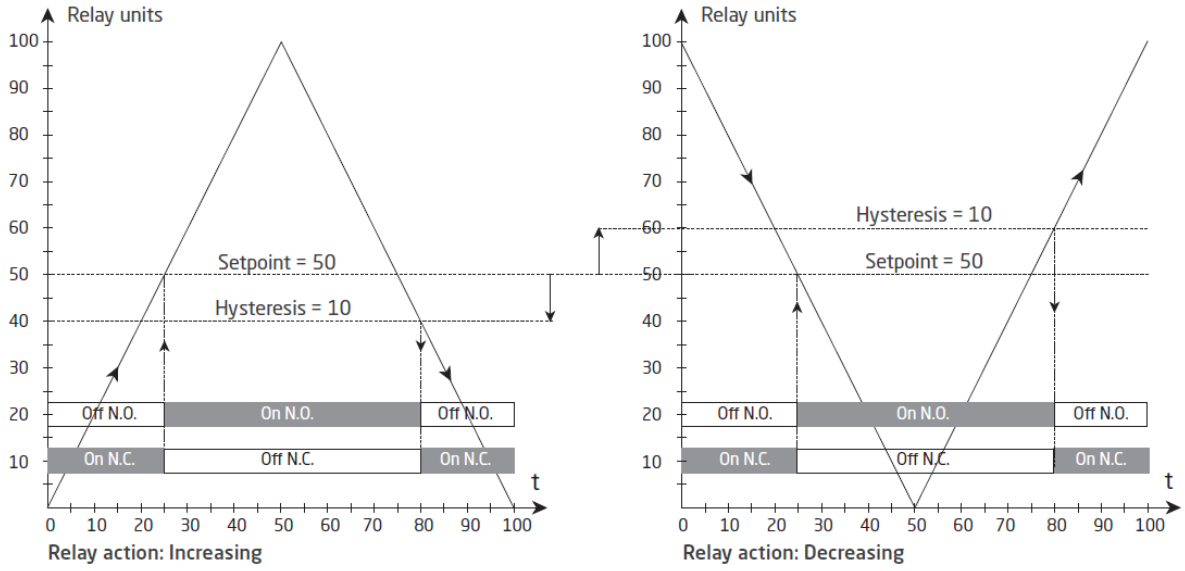

17.4 Graphische Abbildung der Relaisfunktion Fenster

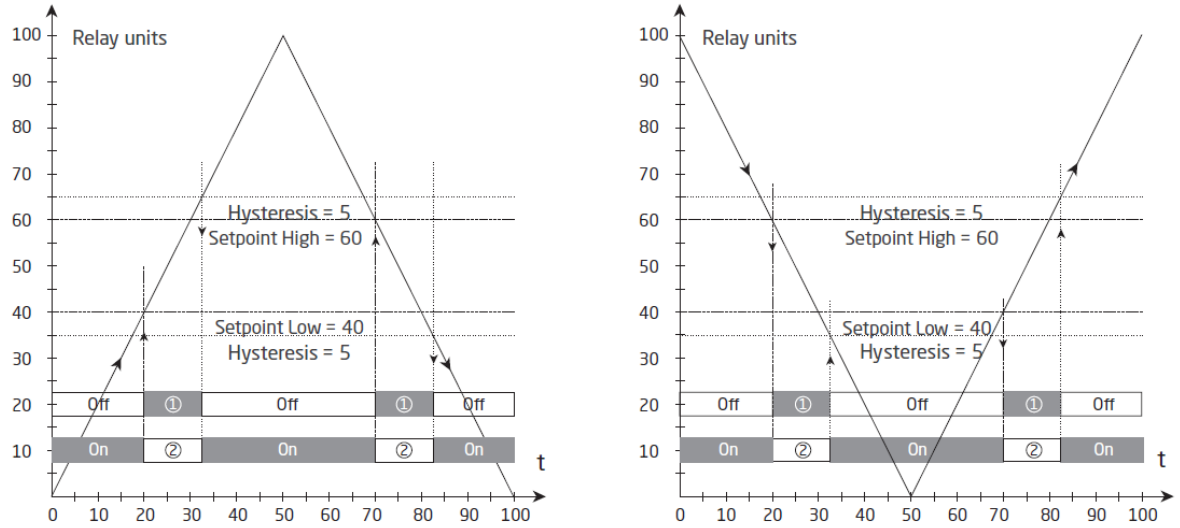

Relay function: Window (shown for increasing signal)
Contact: Closed inside window = ①
Contact: Open inside window = ②

Relay function: Window (shown for decreasing signal)
Contact: Closed inside window = ①
Contact: Open inside window = ②

promesstec GmbH I Niedersachsenstraße 4 I D- 48465 Schüttorf I Tel.:+49 (0)5923/ 90 229 0 I Fax:+49 (0)5923/ 90 229 29
E-Mail: office@promesstec.com I Internet: www.promesstec.com

18. Maintenance, Dismounting, Return, Liaility, Cleaning and Disposal

18.1 Maintenance, Dismounting

Warnung

Residual media in dismounted instruments can result in a risk of personnel, the environment and equipment. Take sufficient precautionary measures.

Warnung

There is a risk of burns. Let the instrument cool down sufficietly before dismounting. During dismounting there is a risk of dangerously hot pressure media escaping.

18.2 Return

Warnung

For return of the device use the original packaging or similar.
As protection against damage can be used, for example, antistatic film, isulating material, labeling as a sesitive measuring device.

18.3 Liability

To the extent the instructions in this manual are not strictly observed, the customer cannot advanced a demand against promesstec GmbH that would otherwise exist according to the concluded sales agreement.

18.4 Cleaning

!

Before cleaning the device, disconnect the electrical connection.
Clean the device with damp towel.
Do not bring the electrical connection into contact with dampness.

When diconnecected the device may be cleaned with a cloth moistened with destilled water.

promesstec GmbH I Niedersachsenstraße 4 I D- 48465 Schüttorf I Tel.:+49 (0)5923/ 90 229 0 I Fax:+49 (0)5923/ 90 229 29
E-Mail: office@promesstec.com I Internet: www.promesstec.com

18.5 Disposal

Dispose of device components and packaging materials in an evironmetally friendly maner in accordance with the country-specific waste treatment and disposal regulations.

Safety instructions

Please read the following safety istructions and mounting *chapter 2* before installation and keep these instructions for future reference.

Warnung

Improper use or opertion may result in personal injury and/or property damage.

Control of the device

The device are checked before shipment and shipped in perfect condition. If any damage is visble on the device, we reommend a precise inspection of the transport packaging. In case of damage, please inform the supplier immediately.

19. Installation

Only technicas, who are familiar with the technical terms, warnings, and instructions in the manual and how are able to follow these, should connect the device.

Should there be any doubt as to the correct handling of the device, please contact your local distributor. However, you can also contact **promesstec GmbH** directly.

Mounting and connection of the device should comply with national legislation for mounting of electric materials, i.e. wire cross section, protective fuse, and location. Describtions of input / output and supply connection are shown in the block diagram and side lable.

The following apply to fixed hazardous voltages –connected devices:

The max. size of the protective fuse is 10 A and,togehter with a power switch, it should easily accessible and close tothe device. The power switch should be marked with a label telling it will switch off the voltage to the device.

promesstec GmbH I Niedersachsenstraße 4 I D- 48465 Schüttorf I Tel.:+49 (0)5923/ 90 229 0 I Fax:+49 (0)5923/ 90 229 29
E-Mail: office@promesstec.com I Internet: www.promesstec.com

20. Order code

Order code: UMU 100… **<u>order-example:</u> UMU 100-B-B**

limit value

-A without limit value
-B with 2 limit value

analog output

-A without analog output
-B with analog output

promesstec GmbH I Niedersachsenstraße 4 I D- 48465 Schüttorf I Tel.:+49 (0)5923/ 90 229 0 I Fax:+49 (0)5923/ 90 229 29
E-Mail: office@promesstec.com I Internet: www.promesstec.com